Request for Quote
Happy Hollow Park Ravine Footpath Repair Phase III
June 10, 2015
West Lafayette Redevelopment Commission

This Request for Quote is the official notice of needed construction services for the West Lafayette Board of Parks & Recreation (the "Board") by and through the West Lafayette Redevelopment Commission (the "Commission").

The Contractor shall furnish all labor, equipment, and materials necessary for the Happy Hollow Park Ravine Footpath Repair, according to the plans and specifications dated November 15, 2012, for the segment between the bottom of Stair 23 and the bottom of Stair 26, plus a temporary connection from bottom of Stair 26 to the ground and existing trail.

The Contractor shall be responsible for the determination and notification of all affected utilities and for the coordination of all work with the utilities and the Board. The Contractor shall be responsible for construction layout on-site per the plans (the Commission will provide initial staking of the centerline alignment) and for receiving approval by the Board prior to proceeding with work. Any necessary permits will be provided by the Board.

Following the issuance of a notice to proceed, the Contractor shall begin construction within one month, and all work is to be completed within six months unless a written extension is granted by the Commission.

The Contractor shall carry all necessary insurance coverage and provide a certificate of insurance to the Board and to the Commission per the City of West Lafayette insurance requirements.

Quotes should be submitted on the enclosed Quote Sheet on or before 8:30 a.m. on June 30, 2015 to: Office of the Clerk-Treasurer, 711 W. Navajo St., West Lafayette, IN 47906. Quotes should be submitted in a sealed envelope identified by "Happy Hollow Park Ravine Footpath Repair" on the outside of the envelope. Properly executed Non-Collusion Affirmation and Employment Eligibility Verification forms should be submitted with the Quote Sheet

Quotes will be opened at the regularly scheduled meeting of the Board of Public Works & Safety in the Multi-Purpose Room of the Morton Community Center, 222 N. Chauncey at 8:30 a.m. on June 30, 2015. Quotes will be taken under consideration for the execution of an Agreement Form, by the Board of Public Works & Safety on behalf of the Commission, with the most responsive and responsible firm which provides a quote most advantageous to the Commission.

Any questions concerning this Request for Quote should be directed to Kevin Hall at hallk1@pbworld.com or (317) 437-5451, or to Janet Fawley at jfawley@wl.in.gov or (765) 775-5110.

Enclosures:

Diagram of Happy Hollow Park Ravine Footpath
Quote Sheet
Non-Collusion Affirmation form
Employment Eligibility Verification form

Happy Hollow Park Ravine Footpath Repair

June 10, 2015

QUOTE SHEET

TOTAL LUMP SUM COST to provide the Happy Hollow Park Ravine Footpath Repair, for the segment between the bottom of Stair 23 and the bottom of Stair 26, plus a temporary connection from bottom of Stair 26 to the ground and existing trail per the Request for Quote dated June 10, 2015:

$_____

COMPANY NAME:_____

COMPANY ADDRESS:_____

AUTHORIZED SIGNATURE:_____DATE:_____

PRINTED AUTHORIZED NAME:_____

PHONE #_____FAX #_____

NON-COLLUSION AFFIRMATION

STATE OF INDIANA

COUNTY OF: _____} SS:

The undersigned offeror or agent, duly swears, under penalties for perjury, that he has not, nor has any other member, representative, or agent of the firm, company, corporation or partnership represented by him, entered into any combination, collusion or agreement with any person relative to the price to be offered by any person nor to prevent any person from making an offer nor to induce anyone to refrain from making an offer and that this offer is made without reference to any other offer.

_____
Offeror (Firm)

_____
Signature of Offeror or Agent

Before me, a Notary Public in and for said County and State personally appeared,

_____, who acknowledged the truth of the

statements in the foregoing affirmation on this _____day of _____, 20 ___.

My Commission Expires:

_____

_____
(written) Notary Public

_____
(printed)

County of Residence: _____

CITY OF WEST LAFAYETTE
EMPLOYMENT ELIGIBILITY VERIFICATION

STATE OF INDIANA)
) SS:
_____ COUNTY)

The Contractor affirms under the penalties of perjury that he/she/it does not knowingly employ an unauthorized alien.

The Contractor shall enroll in and verify the work eligibility status of all his/her/its newly hired employees through the E-Verify program as defined in IC 22-5-1.7-3. The Contractor is not required to participate should the E-Verify program cease to exist. Additionally, the Contractor is not required to participate if the Contractor is self-employed and does not employ any employees.

The Contractor shall not knowingly employ or contract with an unauthorized alien. The Contractor shall not retain an employee or contract with a person that the Contractor subsequently learns is an unauthorized alien.

The Contractor shall require his/her/its subcontractors, who perform work under this contract, to certify to the Contractor that the subcontractor does not knowingly employ or contract with an unauthorized alien and that the subcontractor has enrolled and is participating in the E-Verify program. The Contractor agrees to maintain this certification throughout the duration of the term of a contract with a subcontractor.

The City may terminate for default if the Contractor fails to cure a breach of this provision no later than thirty (30) days after being notified by the City.

Dated this _____ day of _____, 20__

_____
Contractor/Bidder (Firm)

_____
Signature of Contractor/Bidder or Its Agent

_____
Printed Name and Title

Subscribed and sworn to before me this _____ day of _____, 20___

My Commission Expires _____ _____
Notary Public

County of Residence _____

Happy Hollow Park
Ravine Footpath Repair

November 15, 2012

OWNER:

City of West Lafayette, Indiana

Department of Parks and Recreation
609 West Navajo Street
West Lafayette, Indiana 47906
(765) 775.5110

CONSULTANTS:

Parsons Brinckerhoff (Design)
300 North Meridian Street, Suite 1010
Indianapolis, Indiana 46204
t. (317) 972.1706 f. (317) 972.1708

TBIRD Design Services Corp. (Surveying)
105 North 10th Street
Lafayette, Indiana 47901
t. (765) 742-1900 f. (765) 742.1905

VICINITY MAP - WEST LAFAYETTE, IN

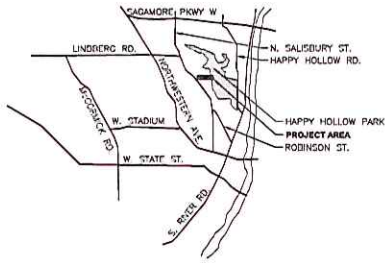

INDEX OF SHEETS

COVER SHEET	
NOTES, LEGEND AND SCHEDULES	C0.1
CONSTRUCTION STAGING PLAN	C0.2
PLAN AND PROFILE - ALIGNMENT 1	C1.1
PLAN AND PROFILE - ALIGNMENT 2	C1.2
BOARDWALK DETAILS	C2.1
BRIDGE DETAILS	C2.2

PROJECT INFORMATION

PROJECT LENGTH

ALIGNMENT 1: STATIONS 10+00 TO 14+94.15 (495.15 FEET)
ALIGNMENT 2: STATIONS 10+00 TO 15+59.27 (559.27 FEET)

PROJECT LIMITS

PARK ACCESS POINT AT THE NORTHEAST SIDE OF NORTH SALISBURY STREET BETWEEN CARROLTON BLVD AND NORTH GRANT STREET. BEGINNING AT THE BOTTOM OF THE EXISTING BOARDWALK STAIRS TO THE INTERSECTION WITH THE EXISTING HAPPY HOLLOW PARK TRAIL.

CONTROL POINT TABLE

POINT #	NORTHING	EASTING	ELEV	DESCRIPTION
1	1891720.21	3000761.42	714.13	MAG NAIL W/TBIRD TRAV. PT. WASHER SET
2	1891103.36	3001322.80	720.07	MAG NAIL W/TBIRD TRAV. PT. WASHER SET
3	1891386.27	3002530.75	726.17	1/2" REBAR W/TBIRD TRAV. PT. CAP SET
4	1891004.03	3003015.93	565.06	1/2" REBAR W/TBIRD TRAV. PT. CAP SET
12	1892383.95	3002747.68	595.92	MAG NAIL W/TBIRD TRAV. PT. WASHER SET
13	1892182.41	3002491.46	588.10	MAG NAIL W/TBIRD TRAV. PT. WASHER SET
14	1891771.36	3002609.48	582.89	MAG NAIL W/TBIRD TRAV. PT. WASHER SET
105	1891825.66	3000827.08	689.64	1/2" REBAR W/TBIRD TRAV. PT. CAP SET
106	1891898.44	3000851.12	677.74	1/2" REBAR W/TBIRD TRAV. PT. CAP SET
107	1891947.84	3001037.11	683.13	1/2" REBAR W/TBIRD TRAV. PT. CAP SET
108	1892063.20	3001250.78	665.92	1/2" REBAR W/TBIRD TRAV. PT. CAP SET
109	1892226.48	3001391.29	660.04	1/2" REBAR W/TBIRD TRAV. PT. CAP SET
110	1892358.13	3001659.40	622.57	1/2" REBAR W/TBIRD TRAV. PT. CAP SET
111	1892276.21	3001910.68	610.52	1/2" REBAR W/TBIRD TRAV. PT. CAP SET

BENCHMARK TABLE

POINT #	ELEV	DESCRIPTION
97	625.46	"X" CUT IN NORTH RIM OF MANHOLE
98	655.23	T POST SET 2.0' ABOVE GRADE, 12' NORTH OF TRAIL CENTERLINE AND 5' SOUTHEAST OF 6' BOULDER
99	682.07	T-POST SET 2.0' ABOVE GRADE 5' SOUTH OF TRAIL CL & 5' EAST OF 15" BASSWOOD
100	715.03	"X" CUT IN NORTHERN BONNET BOLT IN FIRE HYDRANT @ CARROLTON & SALISBURY

NOTE: NOT ALL SURVEYED BENCHMARKS AND CONTROL POINTS LISTED ABOVE ARE SHOWN ON THESE DRAWINGS. COMPLETE SURVEY DRAWINGS ARE AVAILABLE UPON REQUEST FROM THE OWNER.

LEGEND

EXISTING

- TREE
- CONTOUR
- DITCH OR SWALE FLOW LINE
- TOP OF BANK
- TOE OF SLOPE
- CP 1 — SURVEY CONTROL POINT
- BM 1 — SURVEY BENCHMARK
- BOARDWALK
- DIRT FOOTPATH
- PAVED TRAIL

ABBREVIATIONS

ASTM	AMERICAN SOCIETY OF TESTING AND MATERIALS
ALSC	AMERICAN LUMBER STANDARD COMMITTEE
ASME	AMERICAN SOCIETY OF MECHANICAL ENGINEERS
AWPA	AMERICAN WOOD PROTECTION ASSOCIATION
BM	BENCHMARK
CP	CONTROL POINT
DOC PS 20	AMERICAN SOFTWOOD LUMBER STANDARD PS 20
E	EAST
ELEV	ELEVATION
INDOT	INDIANA DEPARTMENT OF TRANSPORTATION
LBS	POUNDS
N	NORTH
NO.	NUMBER
PI	POINT OF INTERSECTION
TBR	TO BE REMOVED
TYP	TYPICAL
S	SOUTH
SF	SQUARE FOOT (FEET)
W	WEST

GENERAL NOTES

1. PROTECT ALL TREES TO REMAIN FROM CONSTRUCTION ACTIVITIES.
2. TREES TO BE REMOVED SHALL BE TAGGED FOR APPROVAL BY THE OWNER'S REPRESENTATIVE PRIOR TO REMOVAL BY THE CONTRACTOR.
3. ALL EXCAVATED SOIL SHALL BE PROPERLY DISPOSED OF ON-SITE IN A MANNER THAT WILL NOT ALLOW RUN OFF OF SEDIMENTS INTO DITCHES OR CREEKS. DEPOSIT EXCAVATED MATERIAL AT LEAST 50 FEET AWAY FROM ANY DITCH, STREAM OR CHANNEL THAT MAY CONVEY RUNOFF. DO NOT DEPOSIT MATERIAL ON SLOPES STEEPER THAN 4:1. SPREAD EXCAVATED MATERIAL TO A DEPTH OF 2" MAXIMUM, EXCEPT AT DEPRESSION IN THE LANDSCAPE THAT MAY BE FILLED WITHOUT THE POSSIBILITY OF CONVEYANCE. TAMP COMPACT EXCAVATED MATERIAL AND COVER WITH 3" MINIMUM DEPTH LEAVES OR STRAW MULCH TO PROTECT IT FROM EROSION.
4. THE CONTRACTOR SHALL SUBMIT ANY REVISIONS TO THE CONSTRUCTION STAGING PLAN FOR APPROVAL BY THE OWNER PRIOR TO BEGINNING CONSTRUCTION ACTIVITIES OR DELIVERING MATERIALS TO THE SITE.
5. BOLT HOLES SHALL BE 1/16" MAXIMUM AND 1/32" MINIMUM LARGER THAN BOLT DIAMETER.
6. UNLESS OTHERWISE INDICATED ALL BOLTS SHALL BE MACHINE BOLTS.
7. ALL EXPOSED BOLTS THAT ARE ORIENTED PERPENDICULAR TO THE BOARDWALK OR BRIDGE SHALL HAVE BOLT HEADS FACING THE EXTERIOR.
8. SINK SCREW HEADS FLUSH WITH LUMBER.

SPECIFICATIONS

1. APPLICABLE CODES: INDIANA BUILDING CODE, 2008

2. DESIGN LOADS
   - 2.1. BOARDWALK, BRIDGE AND STAIRS: 60 PSF LIVE LOAD
   - 2.2. HANDRAILS AND GUARDS: 200 LBS CONCENTRATED LOAD IN ANY DIRECTION AT ANY POINT ALONG THE TOP.
   - 2.3. RAIL COMPONENTS (EXCEPT HANDRAIL) 50 LBS APPLIED HORIZONTALLY TO A 1 SF AREA.

3. CONCRETE:
   - 3.1. PACKAGED: STRUCTURAL CONCRETE MIX, NORMAL SET, 4000 PSI AT 28 DAYS, ASTM C 387.
     - 3.1.1. MIX IN ACCORDANCE WITH MANUFACTURES WRITTEN INSTRUCTIONS.
     - 3.1.2. STORE IN A DRY, EASILY ACCESSIBLE, LEVEL LOCATION.
   - 3.2. READY MIX: INDOT CLASS A STRUCTURAL CONCRETE IN ACCORDANCE WITH SECTION 702 OF THE INDOT STANDARD SPECIFICATIONS.
   - 3.3. FORM FACING MATERIALS: PROVIDE CONTINUOUS, TRUE AND SMOOTH CONCRETE SURFACES. ABOVE GRADE PREM FORMS BY SONOTUBE OR SIMILAR PRODUCT.

4. PIPE AND TUBE RAILINGS
   - 4.1. BRACKETS, FLANGES AND ANCHORS SHALL BE CAST OR FORMED METAL OF SAME MATERIAL AND FINISH AS SUPPORTED RAILS.
   - 4.2. PIPE: ASTM A 53, TYPE S, GRADE A, STANDARD WEIGHT (SCHEDULE 40)
   - 4.3. PLATES, SHAPES AND BARS: ASTM A 36
   - 4.4. GALVANIZING REPAIR PAINT: HIGH ZINC-DUST CONTENT PAINT COMPLYING WITH SSPC-PAINT 20.
   - 4.5. FABRICATION:
     - 4.5.1. CUT, DRILL AND PUNCH METALS CLEANLY AND ACCURATELY. REMOVE BURRS AND EASE EDGES TO A RADIUS OF APPROXIMATELY 1/16". REMOVE SHARP OR ROUGH AREAS ON EXPOSED SURFACES.
     - 4.5.2. FORM WORK TRUE TO LINE AND LEVEL WITH ACCURATE ANGLE AND SURFACES.
     - 4.5.3. COPE COMPONENTS AT CONNECTIONS TO PROVIDE CLOSE FIT. WELD CONNECTIONS ALL AROUND AT CONNECTIONS, INCLUDING AT FITTINGS. USE MATERIALS AND METHODS THAT MINIMIZE DISTORTION AND DEVELOP STRENGTH AND CORROSION RESISTANCE. OBTAIN FUSION WITHOUT UNDERCUT OR OVERLAP. REMOVE FLUX IMMEDIATELY. FINISH EXPOSED SURFACES SMOOTH AND BLENDED SO NO ROUGHNESS SHOWS AFTER FINISHING AND WELD SURFACE SO IT MATCHES CONTOURS OF ADJOINING SURFACES.
     - 4.5.4. FORM CHANGES IN DIRECTION BY BENDING MEMBERS IN JIGS TO PRODUCE UNIFORM CURVATURE WITH OUT BUCKLING OR DEFORMATIONS OF EXPOSED SURFACE.
     - 4.5.5. CLOSE EXPOSED ENDS OF RAILING WITH PREFABRICATED END FITTINGS. PROVIDE WALL RETURNS AT ENDS OF WALL-MOUNTED HANDRAILS.
     - 4.5.6. PROVIDE BRACKETS, FLANGES, FITTINGS AND ANCHORS TO INTERCONNECT RAILING MEMBERS TO OTHER WORK.
   - 4.6. FINISHES: HOT-DIP GALVANIZE RAILINGS, INCLUDING HARDWARE, AFTER FABRICATION.
5. METAL FABRICATIONS
   - 5.1. GENERAL: PROVIDE MATERIALS WITH SMOOTH, FLAT SURFACES, WITHOUT SEAM MARKS, ROLLER MARKS, ROLLED TRADE NAMES OR DIMPLES.
   - 5.2. FERROUS METALS: STEEL PLATES, SHAPES AND BARS PER ASTM A 36. STEEL TUBING PER ASTM A 500, GRADE B COLD-FORMED.
   - 5.3. WELDING RODS AND BARE ELECTRODES: SELECT ACCORDING TO AWS SPECIFICATIONS FOR METAL ALLOY WELDED.
   - 5.4. GALVANIZING REPAIR PAINT: HIGH-ZINC-DUST-CONTENT PAINT COMPLYING WITH SSPC-PAINT 20.
   - 5.5. FABRICATION, GENERAL: PRE-ASSEMBLE ITEMS IN THE SHOP. CUT DRILL AND PUNCH METALS CLEANLY AND ACCURATELY. REMOVE BURS AND EASE EDGES TO A RADIUS OF 1/16". REMOVE SHARP OR ROUGH AREAS ON EXPOSED SURFACES. WELD CORNERS AND SEAMS CONTINUOUSLY. GALVANIZE ALL METAL FABRICATIONS. PROVIDE ANCHORAGE OF TYPE INDICATED; COORDINATE WITH SUPPORTING STRUCTURE.
   - 5.6. SUPPORTS: FABRICATE UNITS FROM STEEL SHAPES, PLATES AND BARS OF WELDED CONSTRUCTION UNLESS OTHERWISE INDICATED. FABRICATE UNITS TO SIZE AND SHAPE INDICATED AND AS NECESSARY TO RECEIVE ADJACENT CONSTRUCTION.
   - 5.7. FINISHES, GENERAL: COMPLY WITH NAAMM'S "METAL FINISHES MANUAL FOR ARCHITECTURAL AND METAL PRODUCTS". FINISH METAL FABRICATIONS AFTER ASSEMBLY. FINISH EXPOSED SURFACES TO REMOVE TOOL AND DIE MARKS AND STRETCH LINES AND BLEND INTO SURROUNDING SURFACE.
   - 5.8. STEEL FINISHES: HOT-DIP GALVANIZE ITEMS TO COMPLY WITH ASTM A 153 FOR STEEL AND IRON HARDWARE AND ASTM A 123 FOR OTHER STEEL AND IRON PRODUCTS.

SPECIFICATIONS

1. EXTERIOR ROUGH CARPENTRY
   - 1.1. LUMBER GENERAL: COMPLY WITH DOC PS 20 AND COMPLYING WITH RULES OF AGENCIES CERTIFIED BY ALSC BOARD OF REVIEW. FACTORY MARK EACH ITEM WITH GRADE STAMP OF GRADING AGENCY. PROVIDE DRESSED LUMBER, S4S UNLESS OTHERWISE INDICATED.
   - 1.2. DIMENSION LUMBER
     - 1.2.1. DECK AND STAIR FRAMING, POSTS AND RAILINGS: NO. 1 GRADE OR BETTER SOUTHERN PINE.
     - 1.2.2. RAILING BOARDS: SOUTHERN PINE, B&B FINISH
   - 1.3. LUMBER PRESERVATIVE TREATMENT: PRESSURE TREATED ACCORDING TO AWPA C15 REQUIREMENTS FOR SAWN BUILDING POLES AND POSTS AS STRUCTURAL MEMBERS.
     - 1.3.1. PRESERVATIVE CHEMICALS AS ACCEPTABLE TO AUTHORITIES HAVING JURISDICTION. USE PROCESS THAT INCLUDES WATER REPELLENT TREATMENT.
     - 1.3.2. APPLICATION: TREAT ALL EXTERIOR ROUGH CARPENTRY.
   - 1.4. DECKING: COMPOSITE PLASTIC LUMBER AS SUPPLIED BY THE OWNER. INSTALLED PER MANUFACTURER'S INSTRUCTIONS.
   - 1.5. FASTENERS
     - 1.5.1. STAINLESS STEEL OR HOT DIP GALVANIZED COATING (ASTM A 153 OR ASTM F 2329). USE STAINLESS STEEL FASTENERS WHERE FASTENERS ARE EXPOSED TO VIEW, I.E. HANDRAILS AND DECKING. USE MANUFACTURER RECOMMENDED FASTENER FOR COMPOSITE PLASTIC DECKING. NAILS OR SCREWS SHALL PENETRATE 1-1/2" MINIMUM INTO SUBSTRATE WITHOUT EXITING ON OPPOSITE SIDE.
     - 1.5.2. NAILS: ASTM F 1667
     - 1.5.3. POWER DRIVEN FASTENERS: NES NER-272
     - 1.5.4. WOOD SCREWS: ASME B18.6.1
     - 1.5.5. LAG SCREWS: ASME B18.2.1
     - 1.5.6. CARBON STEEL BOLTS: ASTM A 307 WITH ASTM A 563 HEX NUTS AND FLAT WASHERS.
     - 1.5.7. POST INSTALLED ANCHORS: STAINLESS STEEL, CHEMICAL OR TORQUE CONTROLLED EXPANSION ANCHORS. STAINLESS STEEL BOLTS AND NUTS COMPLYING WITH ASTM F 593 AND ASTM F 594 ALLOY GROUP 1 OR 2.
   - 1.6. METAL FRAMING ANCHORS: SIMPSON STRONG TIE COMPANY, INC. OR OR COMPARABLE PRODUCT.
     - 1.6.1. PROVIDE PRODUCT WITH ALLOWABLE DESIGN LOADS, AS PUBLISHED BY THE MANUFACTURER, THAT MEET OR EXCEED THOSE INDICATED ON THE DRAWINGS
     - 1.6.2. GALVANIZED STEEL SHEET: HOT DIP ZINC-COATED SHEET COMPLYING WITH ASTM A 653, G60 OR BETTER COATING DESIGNATION.
     - 1.6.3. JOIST HANGERS: U-SHAPED WITH 2-INCH LONG SEAT AND 1-1/4-INCH WIDE NAILING FLANGES AT LEAST 85 PERCENT OF JOIST DEPTH.
     - 1.6.4. POST BASES: ADJUSTABLE SOCKET TYPE FOR BOLTING IN PLACE WITH STAND OFF PLATE TO RAISE THE POST 1-INCH MINIMUM ABOVE BASE.

Consultants:

PARSONS BRINCKERHOFF

300 North Meridian Street, Suite 1010
Indianapolis, Indiana 46204
t. (317) 972.7706 f. (317) 972.7708

TBIRD Design Services Corp.

105 North 10th Street
Lafayette, IN 47901
t. (765) 742.1900 f. 765.742.1905

REV	DESCRIPTION	DATE

Happy Hollow Park Ravine Footpath Repair

City of West Lafayette, Indiana
Parks and Recreation

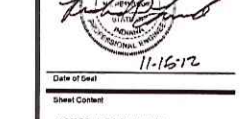

11-15-12

Date of Seal

Sheet Content

NOTES, LEGEND AND SCHEDULES

DATE	November 15, 2012
SCALE	AS SHOWN
DRAWN BY	HLM
CHECKED BY	WK
APPROVED BY	RL

Project Number 35687A

Sheet Number **C0.1**

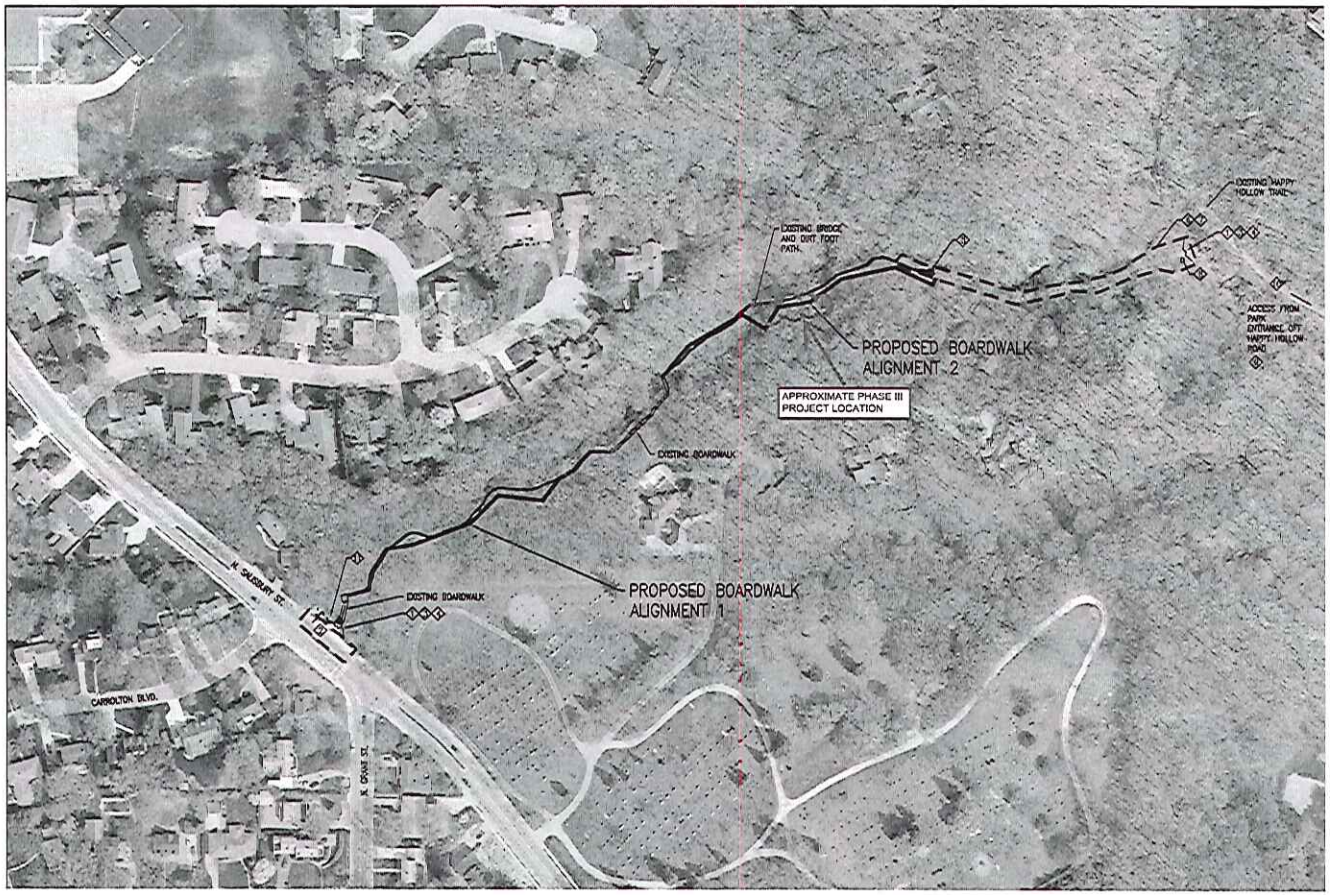

1 CONSTRUCTION STAGING PLAN
SCALE: 1"=100'

0 50 100 200
1" = 100'-0"

GENERAL NOTES

1. THE PURPOSE OF THIS PLAN IS TO IDENTIFY, IN ADVANCE OF PERMITS, THE TEMPORARY CONSTRUCTION MEASURES THAT WILL BE USED TO PROTECT THE GENERAL PUBLIC IN THE VICINITY OF THE WORK SITE. THE CITY DESIRES TO MINIMIZE THE IMPACT THAT CONSTRUCTION WILL HAVE ON NEIGHBORING PROPERTIES AND THE GENERAL PUBLIC. THE CONTRACTOR SHALL REVIEW AND SUBMIT ANY RECOMMENDED REVISIONS REGARDING THIS PLAN TO THE CITY FOR APPROVAL PRIOR TO ISSUANCE OF A PERMIT FOR CONSTRUCTION.
2. WORKERS SHALL NOT TRESPASS ON ADJACENT PROPERTIES TO ACCESS THE SITE. ONLY ACCESS THE SITE FROM CITY OWNED FACILITIES AT CONSTRUCTION ENTRANCES INDICATED ON THIS PLAN.
3. TREE PROTECTION: DO NOT STORE MATERIALS OR DRIVE EQUIPMENT WITHIN THE DRIP LINE OF EXISTING TREES UNLESS OTHERWISE AUTHORIZED BY THE CITY. THE DRIP LINE SHALL BE DEFINED AS THE ZONE BETWEEN THE EDGE OF THE TREE CANOPY AND THE BASE OF THE TREE TRUNK.
4. ANY DAMAGE TO THE TRAIL, LANDSCAPE OR OTHER FACILITIES AS A RESULT OF CONSTRUCTION VEHICLES OR ACTIVITIES SHALL BE REPAIRED AT THE CONTRACTOR'S EXPENSE.

KEYED NOTES

1. CONSTRUCTION ENTRANCE: CONTRACTOR SHALL INSTALL A TEMPORARY CONSTRUCTION FENCE AND GATE MEETING THE FOLLOWING REQUIREMENTS:
   - 1.1. THE FENCE SHALL BE A MINIMUM 8' HIGH CHAIN LINK.
   - 1.2. THE FENCE SHALL BE OF SUFFICIENT LENGTH AND CONFIGURATION TO CREATE A VISUAL DETERRENT, ±20' EACH SIDE OF GATE.
   - 1.3. GATE SHALL HAVE A MINIMUM OF 10' WIDE OPENING.
   - 1.4. FENCE SHALL BE SECURED WITH POSTS DRIVEN INTO THE GROUND AT 8' ON CENTER MAXIMUM SPACING. USE CAUTION AROUND UTILITIES.
   - 1.5. FENCE SHALL BE MAINTAINED IN A PLUMB CONDITION AT ALL TIMES.
   - 1.6. OPENINGS IN FENCE SHALL BE PROTECTED WITH LOCKABLE GATES WITH KEY(S) PLACED IN TO A KNOX BOX.
   - 1.7. GATES SHALL BE LOCKED AT ALL TIMES OF CONSTRUCTION WHILE WORKMEN ARE NOT ON THE SITE.
2. NORTH SALISBURY STREET ACCESS AREA: A TEMPORARY LANE CLOSURE WILL LIKELY BE REQUIRED FOR DELIVERY OF MATERIALS TO THE SITE FROM NORTH SALISBURY STREET. THE CONTRACTOR SHALL SUBMIT TEMPORARY TRAFFIC CONTROL PLANS TO THE CITY FOR APPROVAL PRIOR TO ISSUANCE OF A BUILDING PERMIT. THE PLAN SHALL INDICATE HOW AND WHEN VEHICULAR AND PEDESTRIAN TRAFFIC WILL BE REDIRECTED AROUND THE ACCESS AREA IN ACCORDANCE WITH THE FOLLOWING:
   - 2.1. VEHICULAR AND PEDESTRIAN TRAFFIC SHALL BE REDIRECTED AROUND THE WORK ZONE IN ACCORDANCE WITH THE INDIANA DEPARTMENT OF TRANSPORTATION WORK ZONE TRAFFIC CONTROL HANDBOOK, LATEST EDITION. APPLICABLE STANDARDS ARE THOSE THAT INCLUDE WORK NEAR AN INTERSECTION.
   - 2.2. LANE CLOSURES SHALL ONLY OCCUR FOR SHORT-TERM DURATIONS FROM 9AM TO 4PM MONDAY THROUGH FRIDAY. REMOVE ALL TEMPORARY TRAFFIC CONTROL DEVICES FROM THE SITE WHILE NOT IN USE.
3. CONSTRUCTION SIGN: THE SIGN SHALL BE SECURED TO THE TEMPORARY CONSTRUCTION FENCE BY THE CONTRACTOR ON EACH SIDE OF PROJECT. THE SIGN SHALL DISPLAY THE FOLLOWING VERBIAGE:
   - 3.1. "CONSTRUCTION SITE – NO TRESPASSING"
   - 3.2. THE CONTRACTOR'S NAME AND 24-HOUR EMERGENCY CONTACT PHONE NUMBER
   - 3.3. THE FENCE CONTRACTOR'S 24-HOUR EMERGENCY CONTACT PHONE NUMBER.
4. KEY LOCK BOX: CONTRACTOR SHALL SECURE THE KEY LOCK BOX ON OR NEAR THE TEMPORARY CONSTRUCTION FENCE. KEY LOCK BOX STYLE AND MOUNTING LOCATION SHALL BE APPROVED BY THE FIRE DEPARTMENT.
5. DUMPSTER: PROVIDE A CONSTRUCTION DUMPSTER WITHIN THE SECURED CONSTRUCTION AREA UNLESS OTHERWISE AUTHORIZED IN WRITING BY THE CITY. NO CONSTRUCTION DEBRIS SHALL BE PLACED IN RECEPTACLES OTHER THAN THE CONSTRUCTION DUMPSTER.
6. CONSTRUCTION STAGING AREA: CONSTRUCTION STAGING MAY OCCUR WITHIN THE AREA IDENTIFIED UNLESS OTHERWISE APPROVED BY THE CITY.
7. MATERIAL STORAGE: ALL MATERIALS TO BE INCORPORATED INTO THE WORK SHALL BE STORED IN A NEAT AND ORDERLY MANNER WITHIN THE CONFINES OF THE STAGING AREA OR AT THE WORK AREA. MAINTAIN A CLEAR PATH ON THE EXISTING PAVED TRAIL FOR VEHICULAR ACCESS AND ON THE EXISTING DIRT FOOT PATH FOR MATERIAL TRANSPORT TO THE WORK SITE.
8. PORTABLE RESTROOM: THE CONTRACTOR SHALL PROVIDE A PORTABLE RESTROOM FOR CONSTRUCTION WORKERS WITHIN THE SECURED CONFINES OF THE WORK ZONE. PROVIDE ROUTINE SERVICE TO THE PORTABLE RESTROOM AS REQUIRED TO KEEP IT IN A SANITARY AND WORKING CONDITION.
9. WORKER PARKING: WORKERS SHALL PARK IN THE EXISTING PARKING LOT AVAILABLE WITHIN HAPPY HOLLOW PARK UNLESS OTHERWISE AUTHORIZED IN WRITING BY THE CITY. WORKERS SHALL NOT PARK ON CITY STREETS OR PRIVATE PROPERTIES.
10. VEHICLES ON EXISTING TRAIL: EXCEPT FOR RESTRICTED WORK ZONES, THE EXISTING HAPPY HOLLOW TRAIL WILL BE OPEN TO THE PUBLIC DURING CONSTRUCTION. WATCH OUT FOR PEDESTRIANS WHEN USING THE EXISTING TRAIL TO ACCESS THE SITE.
11. GAS MAIN: USE CAUTION AROUND THE EXISTING GAS MAIN. DO NOT ALLOW SMOKING ON THE PROJECT SITE OR AROUND THE GAS MAIN.

Consultants:
PARSONS BRINCKERHOFF
300 North Meridian Street, Suite 1010
Indianapolis, Indiana 46204
t. (317) 972.7706 f. (317) 972.7708

TBIRD Design Services Corp.
105 North 10th Street
Lafayette, IN 47901
t. (765) 742.1900 f. 765.742.1905

REV	DESCRIPTION	DATE

Happy Hollow Park Ravine Footpath Repair
City of West Lafayette, Indiana
Parks and Recreation

11-15-12
Date of Seal

Sheet Content
CONSTRUCTION STAGING PLAN

DATE	November 15, 2012
SCALE	AS SHOWN
DRAWN BY	HLM
CHECKED BY	WK
APPROVED BY	RL
Project Number	35667A
Sheet Number	C0.2

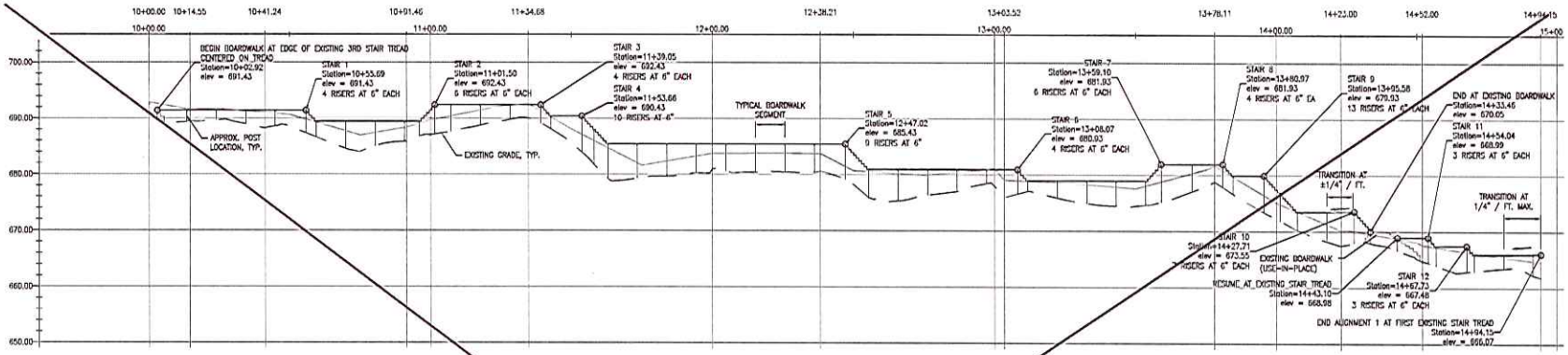

1 PROFILE - ALIGNMENT 1

SCALE: 1"=20' (H), 1"=10' (V)

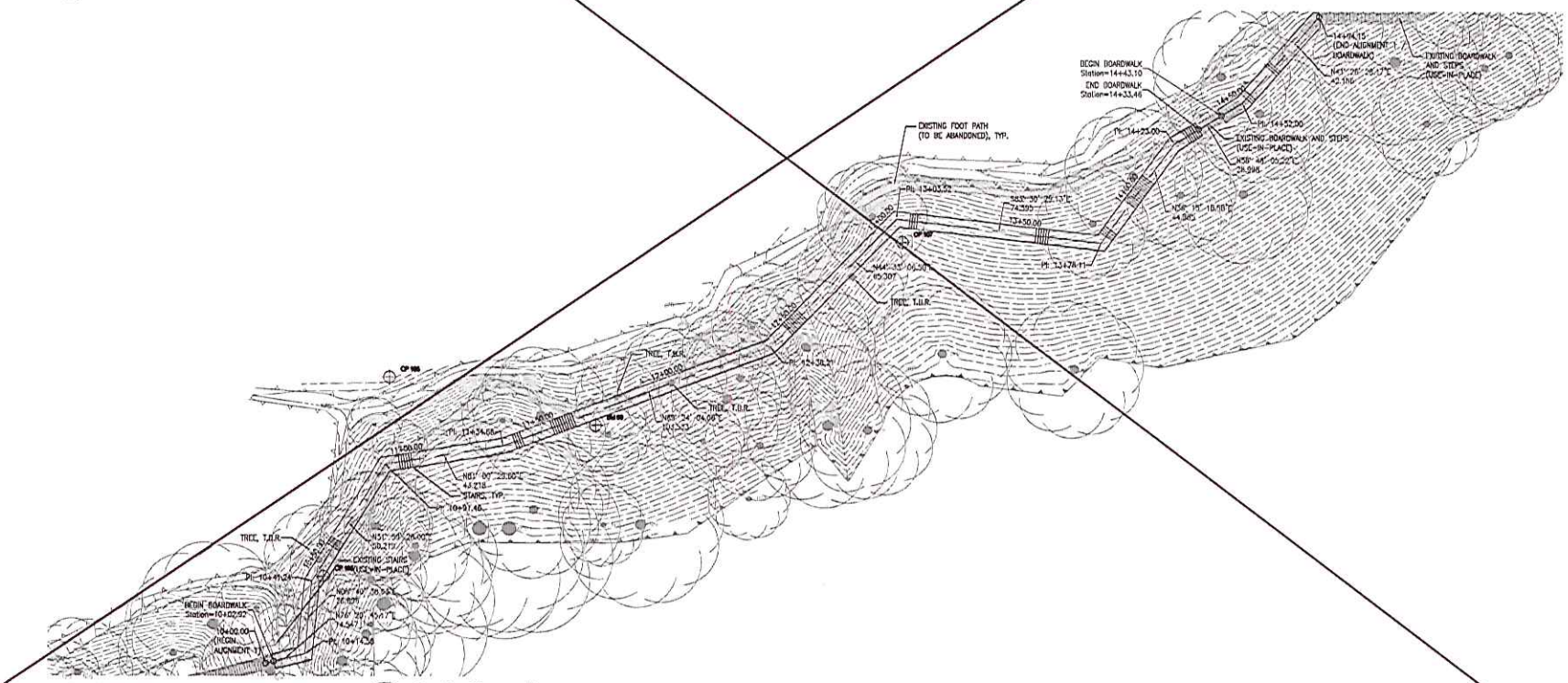

2 SITE PLAN - ALIGNMENT 1

SCALE: 1"=20'

0 10 20 40

1" = 20'-0"

Consultants:

PARSONS BRINCKERHOFF

300 North Meridian Street, Suite 1010
Indianapolis, Indiana 46204
t. (317) 972.1708 f. (317) 972.1708

TRIND Design Services Corp.
105 North 10th Street
Lafayette, IN 47901
t. (765) 742.1909 f. 765.742.1905

REV	DESCRIPTION	DATE

Happy Hollow Park Ravine Footpath Repair

City of West Lafayette, Indiana
Parks and Recreation

11-16-12

Date of Seal

Sheet Content

PLAN AND PROFILE ALIGNMENT 1

DATE	November 15, 2012
SCALE	AS SHOWN
DRAWN BY	HLM
CHECKED BY	WK
APPROVED BY	RL

Project Number 35647A

Sheet Number **C1.1**

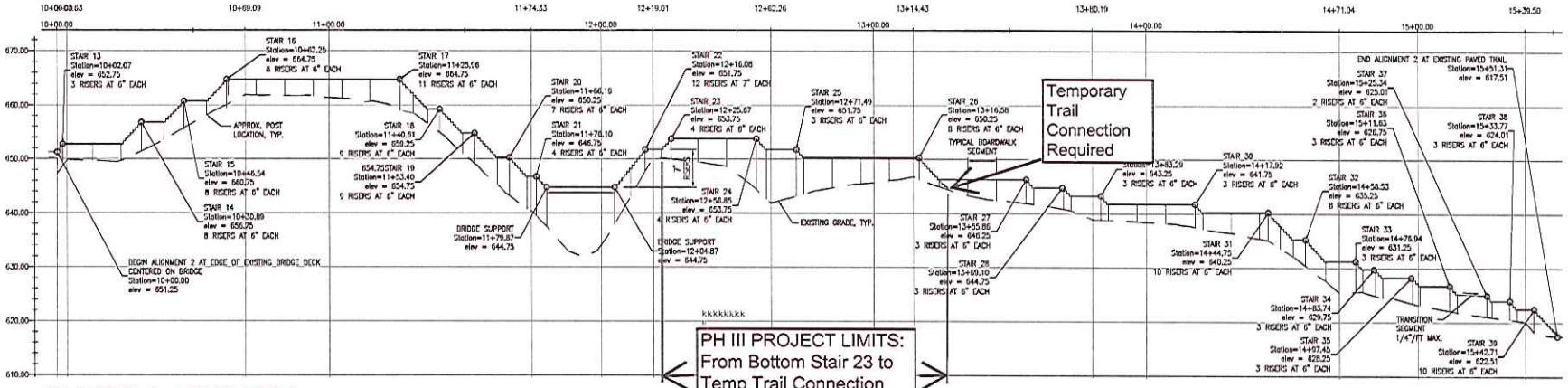

1 PROFILE - ALIGNMENT 2
SCALE: 1"=20' (H); 1"=10' (V)

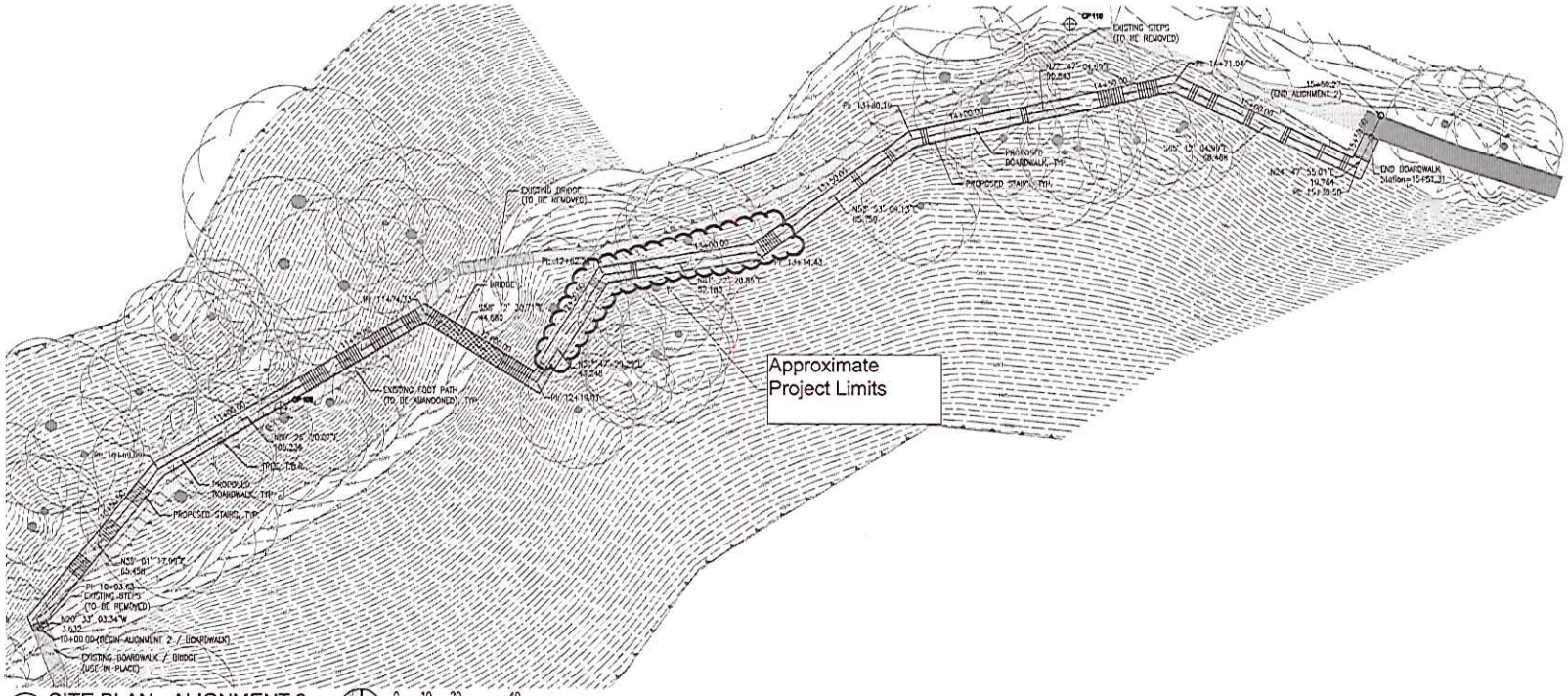

2 SITE PLAN - ALIGNMENT 2
SCALE 1"=20'

0 10 20 40
1" = 20'-0"

Consultants:

PARSONS BRINCKERHOFF
300 North Meridian Street, Suite 1010
Indianapolis, Indiana 46204
t. (317) 972.1706 f. (317) 972.1708

TBIRD Design Services Corp.
105 North 10th Street
Lafayette, IN 47901
t. (765) 742.1900 f. 765.742.1905

REV	DESCRIPTION	DATE

Happy Hollow Park Ravine Footpath Repair

City of West Lafayette, Indiana
Parks and Recreation

11-16-12

Date of Seal

Sheet Content

PLAN AND PROFILE ALIGNMENT 2

DATE	November 16, 2012
SCALE	AS SHOWN
DRAWN BY	HLM
CHECKED BY	WK
APPROVED BY	RL
Project Number	35687A

Sheet Number **C1.2**

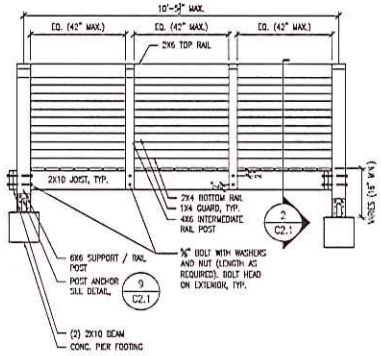

1 BOARDWALK ELEVATION
SCALE: 1/2"=1'-0"

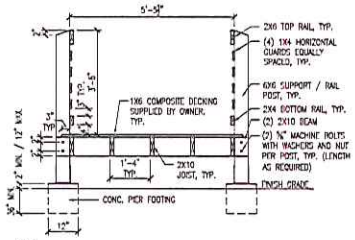

NOTE
1. ALL TOP AND BOTTOM RAIL SPLICES SHALL OCCUR AT A POST.
2. SECURE WOOD RAILS TO POSTS WITH 2 SCREWS MINIMUM, 4 AT SPLICES OVER POSTS (2 PER RAIL).

2 BOARDWALK SECTION
SCALE: 1/2"=1'-0"

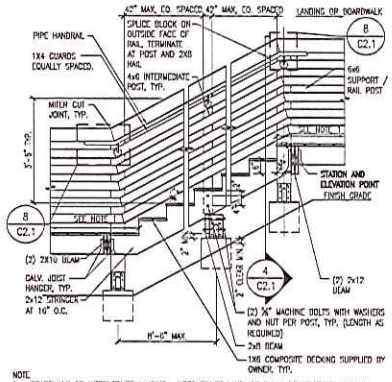

NOTE
1. BOARDWALK OR INTERMEDIATE LANDING. INTERMEDIATE LANDINGS SHALL BE AT LEAST AS LONG AS THE STAIR WIDTH (5'-6" MIN.).
2. TERMINATE HANDRAILS AS SHOWN. HANDRAILS SHALL EXTEND ONE TREAD DEPTH BEYOND BOTTOM RISER AND 12" BEYOND TOP RISER, MINIMUM.

3 STAIRWAY SECTION
SCALE: 1/2"=1'-0"

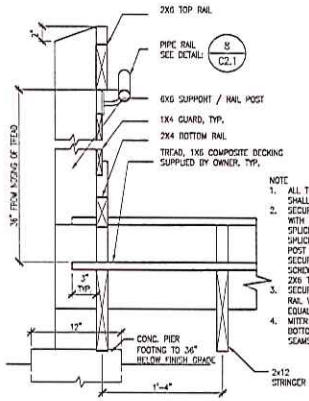

NOTE
1. ALL TOP AND BOTTOM RAIL SPLICES SHALL OCCUR AT A POST.
2. SECURE WOOD RAILS TO POSTS WITH 2 SCREWS MINIMUM, 4 AT SPLICES OVER POSTS. RAIL SPLICES THAT DO NOT INTERSECT A POST SHALL BE PRE-DRILLED AND SECURED TO ADJACENT RAIL WITH 2 SCREWS MINIMUM, 3 SCREWS FOR 2X6 TOP RAIL.
3. SECURE 2X6 TOP RAIL TO 2X4 TOP RAIL WITH SCREWS AT 24" MAX. EQUAL SPACING.
4. MITER CUT JOINTS AT TOP AND BOTTOM RAILS FOR HAIRLINE FIT SEAMS.

4 STAIRWAY SECTION
SCALE: 1-1/2"=1'-0"

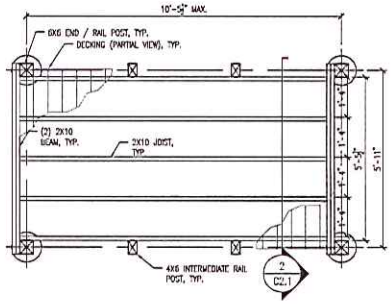

5 BOARDWALK FRAMING PLAN
SCALE: 1/2"=1'-0"

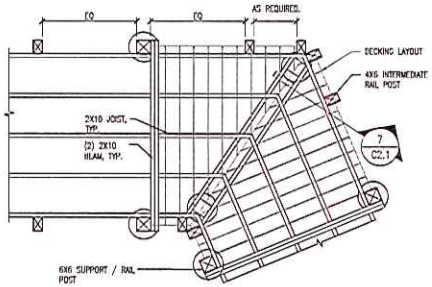

6 DEFLECTED BOARDWALK FRAMING
SCALE: 1/2"=1'-0"

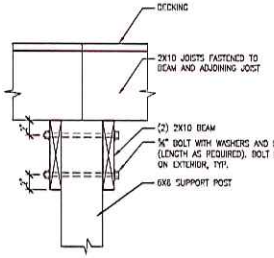

7 BEAM DETAIL AT DEFLECTION
SCALE: 1-1/2"=1'-0"

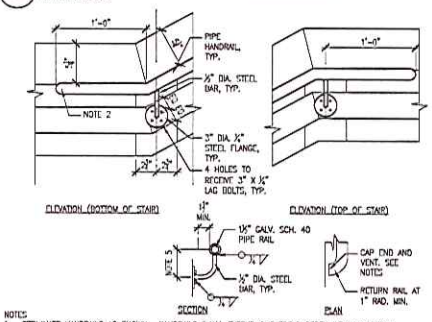

NOTES
1. TERMINATE HANDRAILS AS SHOWN. HANDRAILS SHALL EXTEND ONE TREAD DEPTH BEYOND BOTTOM RISER AND 12" BEYOND TOP RISER, MINIMUM.
2. TURN ENDS TOWARD WOOD RAIL AND END WITHIN ½" OF WOOD RAIL, CAP END.
3. DRILL ¼" HOLE IN BOTTOM OF RAIL ENDS FOR VENTING.
4. GALVANIZE RAIL ASSEMBLY.
5. BAR LENGTH AS REQUIRED FOR FLANGE AND RAIL POSITIONS INDICATED, 4" MAX.

8 HANDRAIL AT STAIRS
SCALE: 1/2"=1'-0"

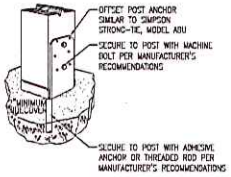

ISOMETRIC

NOTES:
1. INSTALL POST ANCHOR IN ACCORDANCE WITH THE MANUFACTURER'S WRITTEN INSTRUCTIONS.
2. POST ANCHOR SIZE SHALL MATCH POST SIZE.

9 TYPICAL POST ANCHOR
SCALE: 1/2"=1'-0"

Consultants:
PARSONS BRINCKERHOFF
300 North Meridian Street, Suite 1010
Indianapolis, Indiana 46204
t. (317) 972.1706 f. (317) 972.1708

TBIND Design Services Corp.
105 North 10th Street
Lafayette, IN 47901
t. (765) 742.1900 f. 765.742.1905

REV	DESCRIPTION	DATE

Happy Hollow Park Ravine Footpath Repair
City of West Lafayette, Indiana
Parks and Recreation

11-15-12

Date of Seal

Sheet Content

BOARDWALK DETAILS

DATE	November 15, 2012
SCALE	AS SHOWN
DRAWN BY	HLM
CHECKED BY	WK
APPROVED BY	RL
Project Number	35687A
Sheet Number	C2.1

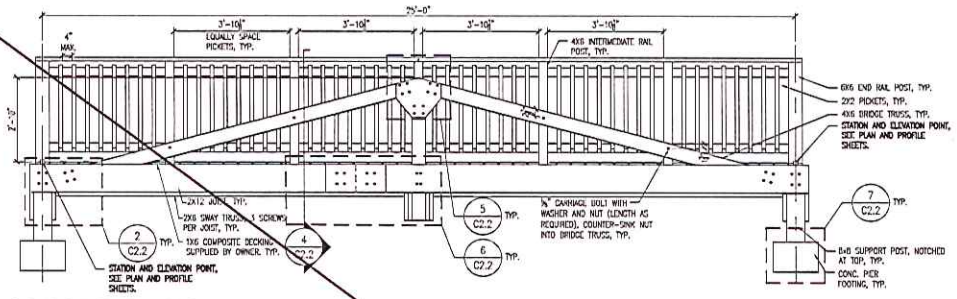

1 BRIDGE ELEVATION
SCALE: 1/2"=1'-0"

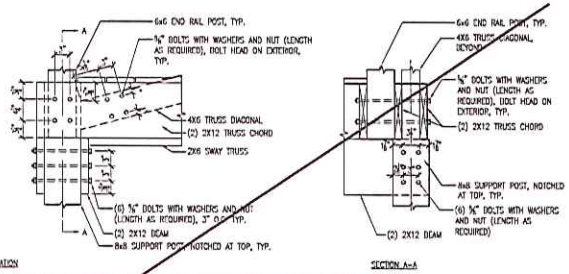

2 BRIDGE TRUSS / SUPPORT POST DETAIL
SCALE: 1"=1'-0"

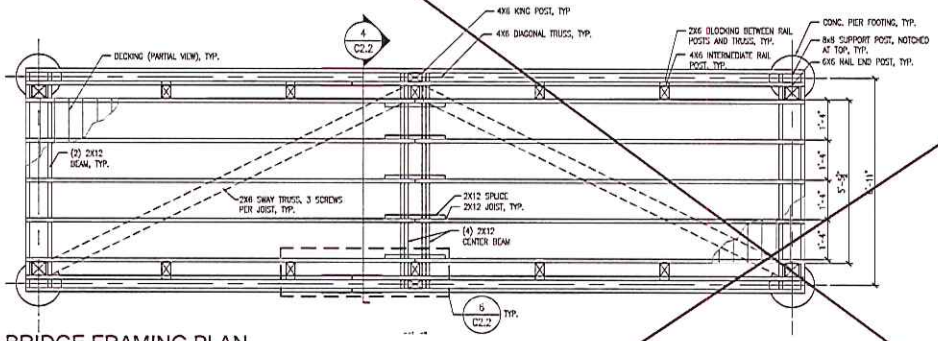

3 BRIDGE FRAMING PLAN
SCALE: 1/2"=1'-0"

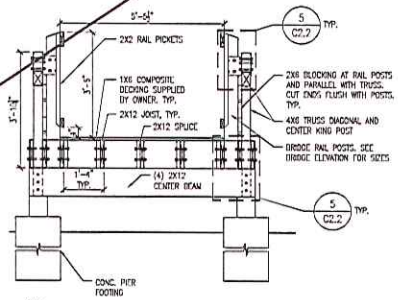

NOTE
1. ALL FASTENERS SHALL BE GALVANIZED OR RATED FOR EXTERIOR USE. DECKING FASTENERS SHALL BE AS RECOMMENDED BY THE DECKING MANUFACTURER.

4 TYPICAL BRIDGE SECTION
SCALE: 1/2"=1'-0"

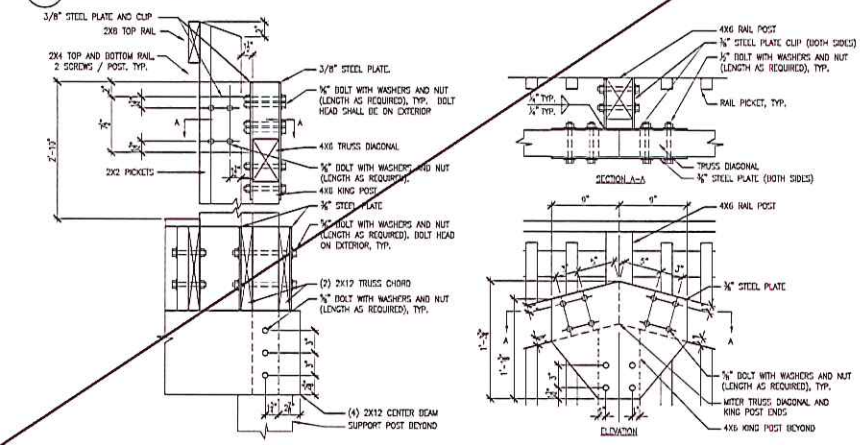

5 BRIDGE RAIL AND TRUSS DETAILS
SCALE: 1-1/2"=1'-0"

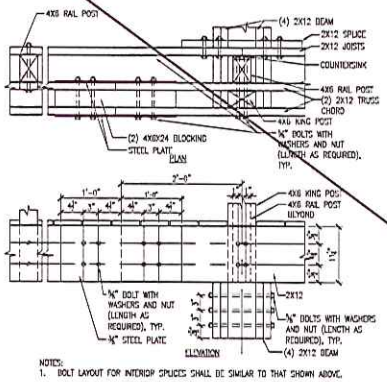

NOTES:
1. BOLT LAYOUT FOR INTERIOR SPLICES SHALL BE SIMILAR TO THAT SHOWN ABOVE.

6 JOIST SPLICE
SCALE: 1"=1'-0"

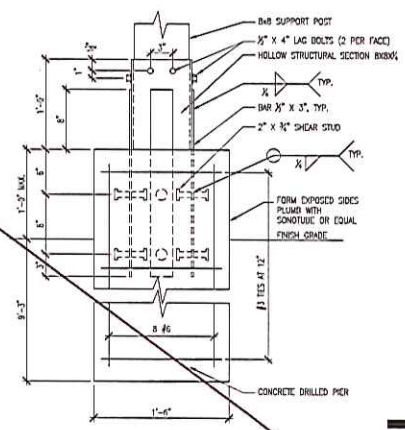

7 BRIDGE FOOTING
SCALE: 1-1/2"=1'-0"

Consultants:
PARSONS BRINCKERHOFF
305 North Meridian Street, Suite 1010
Indianapolis, Indiana 46204
t. (317) 972.1706 f. (317) 972.1708

TBIRD Design Services Corp.
105 North 10th Street
Lafayette, IN 47901
t. (765) 742.1906 f. 765.742.1905

REV	DESCRIPTION	DATE

Happy Hollow Park Ravine Footpath Repair

City of West Lafayette, Indiana
Parks and Recreation

11-16-12

Date of Seal

Sheet Content

BRIDGE DETAILS

DATE	November 16, 2012
SCALE	AS SHOWN
DRAWN BY	HLM
CHECKED BY	WK
APPROVED BY	RL
Project Number	35667A
Sheet Number	C2.2