CITY OF WEST LAFAYETTE, INDIANA

DRAWINGS FOR

WESTERN SANITARY SEWER INTERCEPTOR
DIVISION V

MAYOR
JOHN DENNIS

BOARD OF PUBLIC WORKS AND SAFETY
JOHN DENNIS, PRESIDENT
SANA BOOKER, MEMBER
BRAD MARLEY, MEMBER
JONATHAN SPEAKER, MEMBER
ELIZABETH STULL, MEMBER

WASTEWATER TREATMENT UTILITY DIRECTOR
DAVID HENDERSON

CITY ENGINEER
DAVID BUCK, P.E.

GREELEY AND HANSEN
6640 INTECH BOULEVARD, SUITE 180
INDIANAPOLIS, INDIANA 46278

SEAL AFFIXED
JUNE 21, 2011

JUNE 2011

FILE: J:\Projects\07914 West Laf Western Sanitary\21 CADD Files\21.70 Final Design\Division IV\COVER 1:1 10/20/10 10:58 GH-H

DRAWING INDEX

SHT NO.	DWG NO.	TITLE
1	G01	INDEX, GENERAL NOTES, LEGEND, SURVEY CONTROL & LOCATION MAP
2	G02	NORTHWESTERN AVENUE & YEAGER ROAD SANITARY SEWER DEMOLITION PLAN
3	G03	NORTHWESTERN AVENUE & YEAGER ROAD EROSION CONTROL PLAN
4	G04	NORTHWESTERN AVENUE SANITARY SEWER PLAN & PROFILE
5	G05	YEAGER ROAD SANITARY SEWER PLAN & PROFILE
6	G06	NORTHWESTERN AVENUE & YEAGER ROAD SANITARY SEWER PLAN & PROFILE
7	G07	CAMELBACK LIFT STATION AND SANITARY SEWER PLAN & PROFILE
8	G08	WINDSOR DRIVE, BLACKBIRD POND, GREEN MEADOWS EROSION CONTROL PLANS
9	G09	WINDSOR DRIVE SANITARY & STORM SEWER DEMOLITION PLAN
10	G10	WINDSOR DRIVE LIFT STATION DEMOLITION SECTION & DETAILS
11	G11	WINDSOR DRIVE SANITARY SEWER PLAN & PROFILE
12	G12	WINDSOR DRIVE STORM SEWER PLAN & PROFILE
13	G13	WINDSOR DRIVE STORM SEWER PLAN & PROFILE
14	G14	WINDSOR DRIVE PAVEMENT IMPROVEMENT PLAN
15	G15	GREEN MEADOWS LIFT STATION FORCE MAIN PLAN & PROFILE
16	G16	BLACKBIRD POND LIFT STATION DEMOLITION AND SEWER IMPROVEMENTS
17	G17	CAMELBACK LIFT STATION DEMOLITION PLAN
18	G18	EROSION & SEDIMENT CONTROL DETAILS
19	G19	MISCELLANEOUS DETAILS
20	G20	MISCELLANEOUS DETAILS
21	G21	STRUCTURE DATA TABLES
22	G22	PAVEMENT & SIDEWALK DETAILS
23	G23	SUGGESTED MAINTENANCE OF TRAFFIC FOR TWO OR MULTI-LANE ROAD
24	G24	VORTEX INSERT

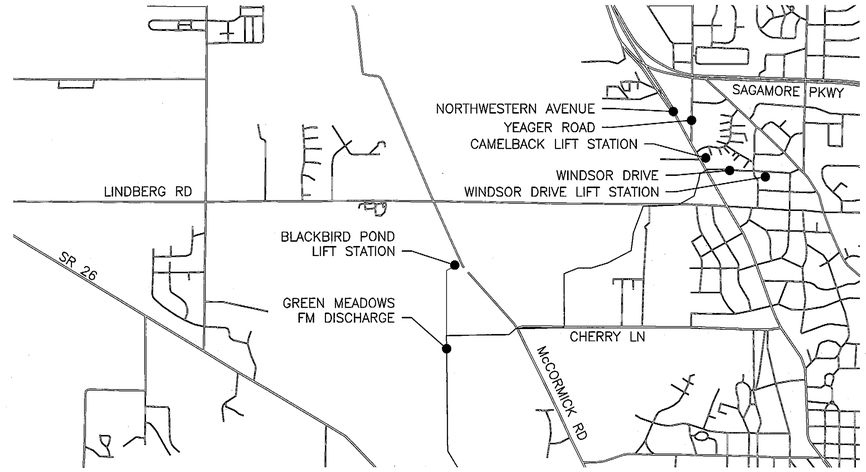

LOCATION MAP

SCALE: NOT TO SCALE

GENERAL NOTES:

1. HORIZONTAL CONTROL IS BASED ON THE INDIANA STATE PLANE COORDINATE SYSTEM HAD 1983 WEST ZONE. ALL ELEVATIONS REFER TO NORTH AMERICAN VERTICAL DATUM 1988.
2. LOCATIONS, ELEVATIONS AND DIMENSION OF EXISTING UTILITIES, STRUCTURES AND OTHER FEATURES ARE ACCORDING TO THE BEST INFORMATION AVAILABLE AND DO NOT PURPORT TO BE ABSOLUTELY CORRECT. VERIFY THE LOCATIONS, ELEVATIONS AND DIMENSIONS OF ALL EXISTING UTILITIES, STRUCTURES AND OTHER FEATURES AFFECTING THE WORK PRIOR TO CONSTRUCTION.
3. PROVIDE AT LEAST 48 HOURS TO THE VARIOUS UTILITY COMPANIES TO PERMIT THE LOCATION OF EXISTING UNDERGROUND UTILITIES IN ADVANCE OF CONSTRUCTION.
4. EXPOSE ALL EXISTING UTILITIES IN ADVANCE OF CROSSING WITH NEW SANITARY SEWER INSTALLATION TO ALLOW FOR ADJUSTMENT. IF REQUIRED AFTER FIELD VERIFICATION, ADJUST ALIGNMENT AND ELEVATION OF NEW PIPELINE AS DIRECTED BY ENGINEER.
5. IN GENERAL UTILITY SERVICE LINES TO INDIVIDUAL CUSTOMERS ARE NOT SHOWN ON THE PLANS, ASSUME THAT UNDERGROUND SERVICE LINE EXIST TO EACH PROPERTY FOR WATER, SANITARY SEWER, GAS, ELECTRIC, TELEPHONE AND CABLE TV. LOCATE, PROTECT AND IF DAMAGED BY CONTRACTOR, REPAIR ALL UTILITY SERVICES LINES ENCOUNTERED.
6. COORDINATE THE ADJUSTMENT OR RELOCATION OF ALL UTILITIES (UNDERGROUND, SURFACE, OR OVERHEAD) WITH THE OWNER OF EACH UTILITY AND ENGINEER PRIOR TO UNDERTAKING ANY CONSTRUCTION OPERATIONS.
7. SUPPORT, PROTECT AND RESTORE ALL UTILITIES AND APPURTENANCES AS REQUIRED TO COMPLETE THE WORK. UTILITY POLE HANDLING BY CONTRACTOR.
8. WHERE NEW SANITARY SEWER CROSS OVER OR UNDER WATER MAINS, PROVIDE A MINIMUM VERTICAL SEPARATION OF 18" BETWEEN THE OUTSIDE OF THE WATER MAIN AND THE OUTSIDE OF THE SEWER.
9. PROVIDE A MINIMUM 4 FEET OF COVER OVER ALL FORCE MAIN PIPE.
10. IF FIELD TILE IS ENCOUNTERED DURING CONSTRUCTION, IT IS THE RESPONSIBILITY OF CONTRACTOR TO NOTIFY ENGINEER OF THEIR FINDINGS.
11. CONTAIN CONSTRUCTION OPERATIONS WITHIN THE LIMITS OF THE RIGHT-OF-WAY AND EASEMENTS INDICATED ON THE DRAWINGS AND USE CARE IN PLACING MATERIALS AND EQUIPMENT SO AS TO CAUSE THE LEAST POSSIBLE DAMAGE TO PROPERTY. RESTORE PROPERTY TO PRECONSTRUCTION CONDITIONS.
12. PROVIDE TEMPORARY CONSTRUCTION FENCE AROUND ALL WORK AREAS AND OPEN EXCAVATIONS.
13. PERFORM ALL CONSTRUCTION ACTIVITIES IN COMPLIANCE WITH APPLICABLE OSHA STANDARDS FOR WORKER SAFETY.
14. FOR CONTRACTOR'S CONVENIENCE, AN EROSION AND SEDIMENT CONTROL PLAN HAS BEEN SUBMITTED TO THE TIPPECANOE COUNTY WATER AND SOIL CONSERVATION DISTRICT IN ACCORDANCE WITH RULE 5 STORMWATER PERMIT REQUIREMENTS. CONTRACTOR MAY DEVELOP AND SUBMIT A SEPARATE EROSION CONTROL PLAN. SEE SPECIFICATIONS.
15. A DISTINCTION BETWEEN NEW AND EXISTING MATERIALS, EQUIPMENT AND STRUCTURES HAS BEEN MADE ON THE DRAWINGS BY LINE WEIGHT. HEAVY (OR BOLD) REPRESENTS NEW AND LIGHT REPRESENTS EXISTING.
16. FIELD LOCATE ALL SANITARY SEWER LATERAL LOCATIONS AND DEPTHS AND PROVIDE INFORMATION TO ENGINEER PRIOR TO COMMENCING SEWER MAIN CONSTRUCTION.

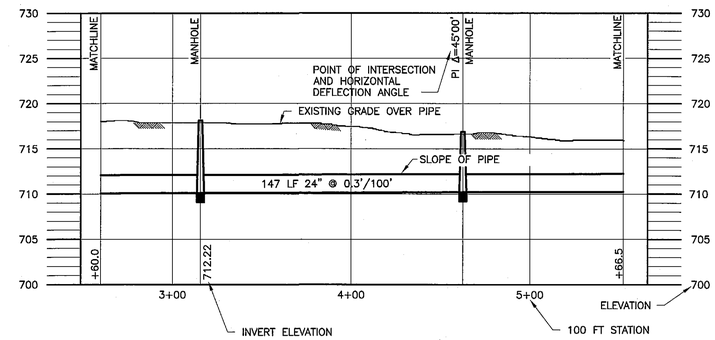

PROFILE

LEGEND

EXISTING STRUCTURES & FEATURES

- BEEHIVE STORM INLET
- BT — BURIED TELEPHONE
- CONTROL MARKER
- CURB STORM INLET
- D — DRAIN
- E — ELECTRIC
- X — FENCE
- FO — FIBER OPTIC
- FIRE HYDRANT
- FLOW LINE
- FM — FORCE MAIN
- GUY — GUY WIRE
- LIGHT POLE
- G — NATURAL GAS
- OU — OVERHEAD UTILITIES
- POWER POLE
- ROCKS — ROCKS
- MANHOLE
- SS — SANITARY SEWER
- SIGN
- × 685.8 — SPOT ELEVATION
- STORM INLET
- STM — STORM SEWER
- T — TELEPHONE PEDESTAL
- TREE
- TREE/BRUSH LINE
- W — WATER
- M — WATER METER
- WATER VALVE

NEW STRUCTURES & FEATURES

- MH — MANHOLE
- CATCH BASIN
- SEWER LINE
- SF — SILT FENCE
- RUN-OFF PATH
- CURB INLET PROTECTION
- SEDIMENT TRAP

CONTROL POINTS SET

NUMBER	NORTHING	EASTING	ELEVATION	DESCRIPTION
CP #350	255422.623	44174.472		
CP #351	254998.614	44227.578		
CP #352	254305.912	44190.061		
CP #1030	1889596.44	2998608.28	670.93	PK NAIL SET IN ROSS AIDE
CP #1046	1893973.27	2997399.57	711.89	MAG WINDW
CP #1047	1893900.27	2998461.20	716.03	MAG WIND LFTE
CP #1048	1891911.08	2991966.90		PK NAIL SET

TEMPORARY BENCHMARKS

NUMBER	NORTHING	EASTING	ELEVATION	DESCRIPTION
TBM #53			718.94	CHISELED "X" ON N. BOLT FIRE HYDRANT @ S.W. CORNER YEAGER RD & US 52
TBM #54			724.14	RR SPIKE IN S.W. SIDE COMB POLE @ S.E. CORNER OF YEAGER RD & ANTHROP DR
TBM #55			717.13	CHISELED "X" IN W. BOLT TRAFFIC POLE @ N.E. CORNER YEAGER RD & US 231

GREELEY AND HANSEN
6640 INTECH BOULEVARD, SUITE 180
INDIANAPOLIS, INDIANA 46278

DESIGNED	LG	APPROVED
DRAWN	LG	SEAL AFFIXED JUNE 21, 2011
CHECKED	JMT	

PAUL J. VOGEL REGISTERED No. PE 10200267 STATE OF INDIANA PROFESSIONAL ENGINEER

NO.	DATE	APPD	REVISION

SCALE: NOT TO SCALE

CITY OF WEST LAFAYETTE, INDIANA

WESTERN SANITARY SEWER INTERCEPTOR
DIVISION V

CIVIL

INDEX, GENERAL NOTES, LEGEND
SURVEY CONTROL & LOCATION MAP

FILE NAME 079140G1.DWG
DWG G1
SHEET 1 OF 24
DATE JUNE 2011 REV 0

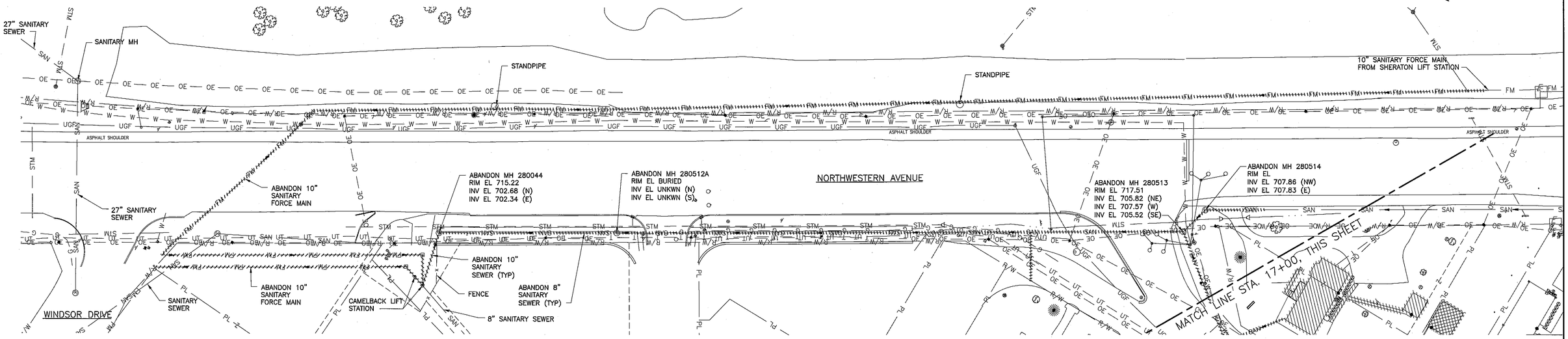

PLAN

SCALE: 1" = 40'

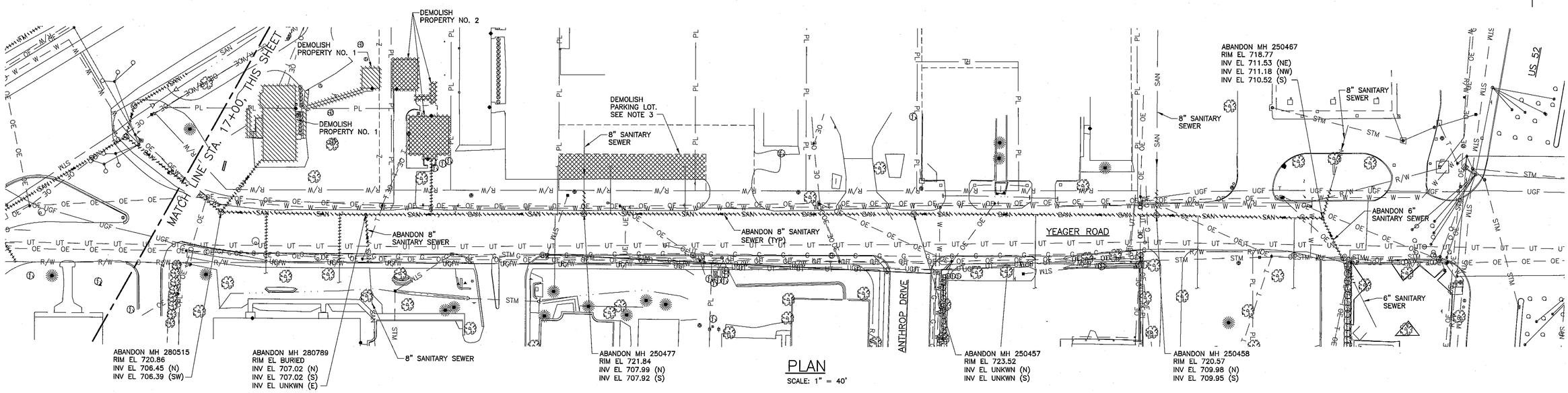

PLAN

SCALE: 1" = 40'

NOTES:

1. ABANDON THE EXISTING SANITARY SEWERS AND SANITARY FORCE MAINS IN PLACE IN ACCORDANCE WITH SPECIFICATION SECTION 02050.
2. DEMOLISH PROPERTY NOS. 1 AND 2 IN ACCORDANCE WITH SPECIFICATION SECTION 02050.
3. REMOVE CONCRETE PARKING LOT. INSTALL TEMPORARY CONSTRUCTION FENCE TO PROVIDE BARRIER BETWEEN REMAINING PARKING LOT AND CONSTRUCTION OF THE WORK.
4. CONTRACTOR MAY USE AREA FROM DEMOLITION OF PROPERTIES NO. 1 AND 2 FOR CONTRACTOR'S FIELD OFFICE, LAYDOWN AND STORAGE.

GREELEY AND HANSEN
6640 INTECH BOULEVARD, SUITE 180
INDIANAPOLIS, INDIANA 46278

DESIGNED	KWG	APPROVED
DRAWN	KWG	SEAL AFFIXED JUNE 21, 2011
CHECKED	JMT	

PAUL J. VOGEL REGISTERED No. PE 10200267 STATE OF INDIANA PROFESSIONAL ENGINEER

NO.	DATE	APPD	REVISION

SCALE: 40 0 40 80 FT 1"=40'

CITY OF WEST LAFAYETTE, INDIANA

WESTERN SANITARY SEWER INTERCEPTOR
DIVISION V

GENERAL
NORTHWESTERN AVE & YEAGER ROAD SANITARY SEWER DEMOLITION PLAN

FILE NAME	079140G2.DWG
DWG	G2
SHEET	2 OF 24
DATE	JUNE 2011
REV	0

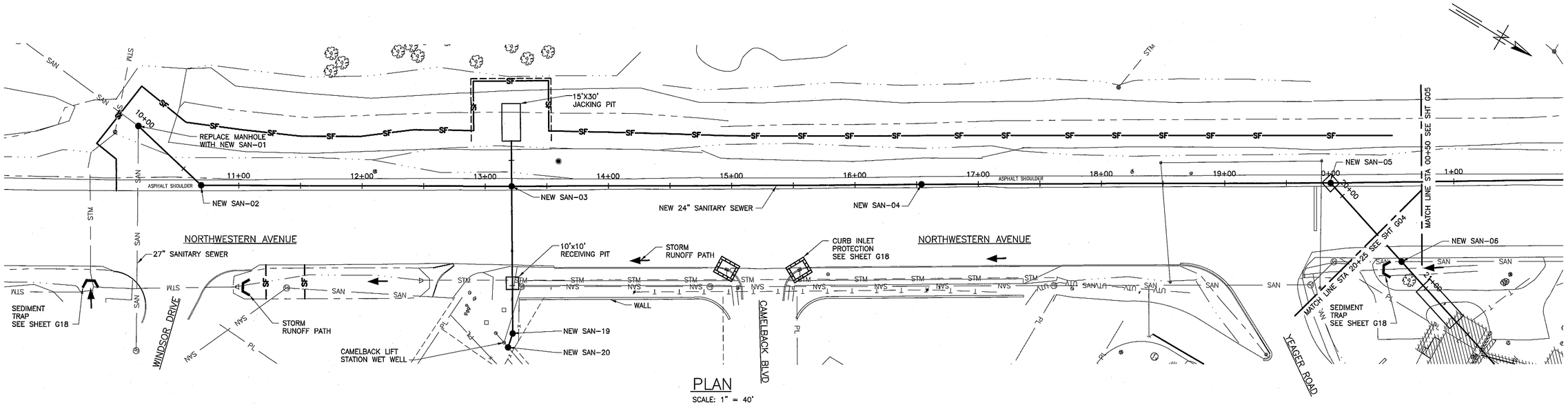

PLAN

SCALE: 1" = 40'

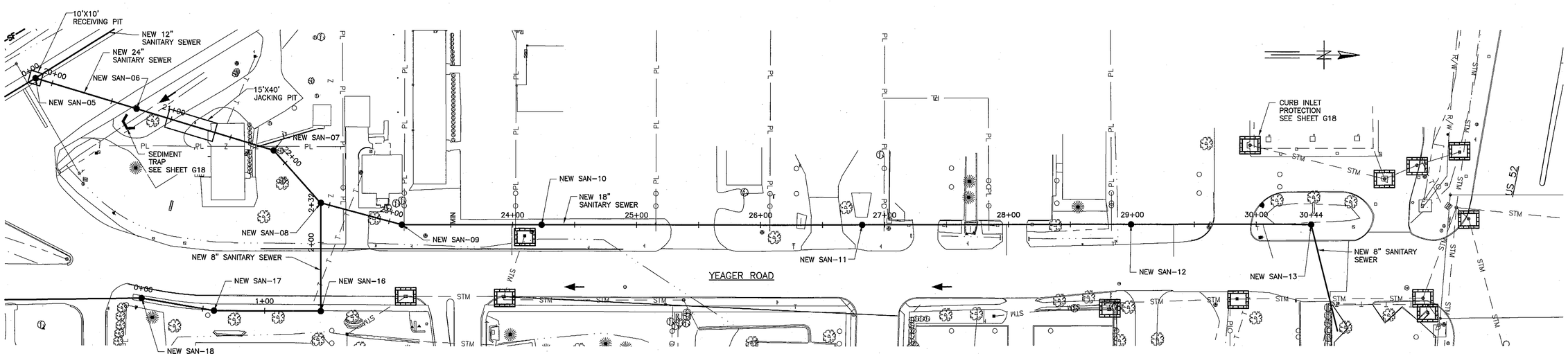

PLAN

SCALE: 1" = 40'

GREELEY AND HANSEN
6640 INTECH BOULEVARD, SUITE 180
INDIANAPOLIS, INDIANA 46278

DESIGNED	KWG	APPROVED
DRAWN	KWG	SEAL AFFIXED JUNE 21, 2011
CHECKED	JMT	

PAUL J. VOGEL REGISTERED No. PE 10200267 STATE OF INDIANA PROFESSIONAL ENGINEER

NO.	DATE	APPD	REVISION

SCALE
40 0 40 80 FT 1"=40'

CITY OF WEST LAFAYETTE, INDIANA

WESTERN SANITARY SEWER INTERCEPTOR
DIVISION V

GENERAL
NORTHWESTERN AVENUE
& YEAGER ROAD
EROSION CONTROL PLAN

FILE NAME	079140G3.DWG
DWG	G3
SHEET	3 OF 24
DATE	JUNE 2011
REV	0

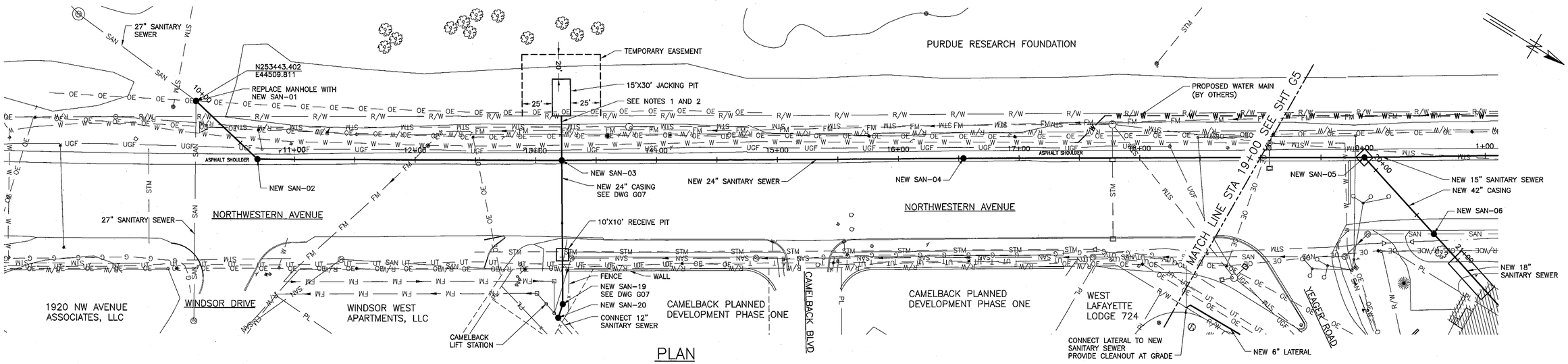

PLAN

SCALE: 1" = 40'

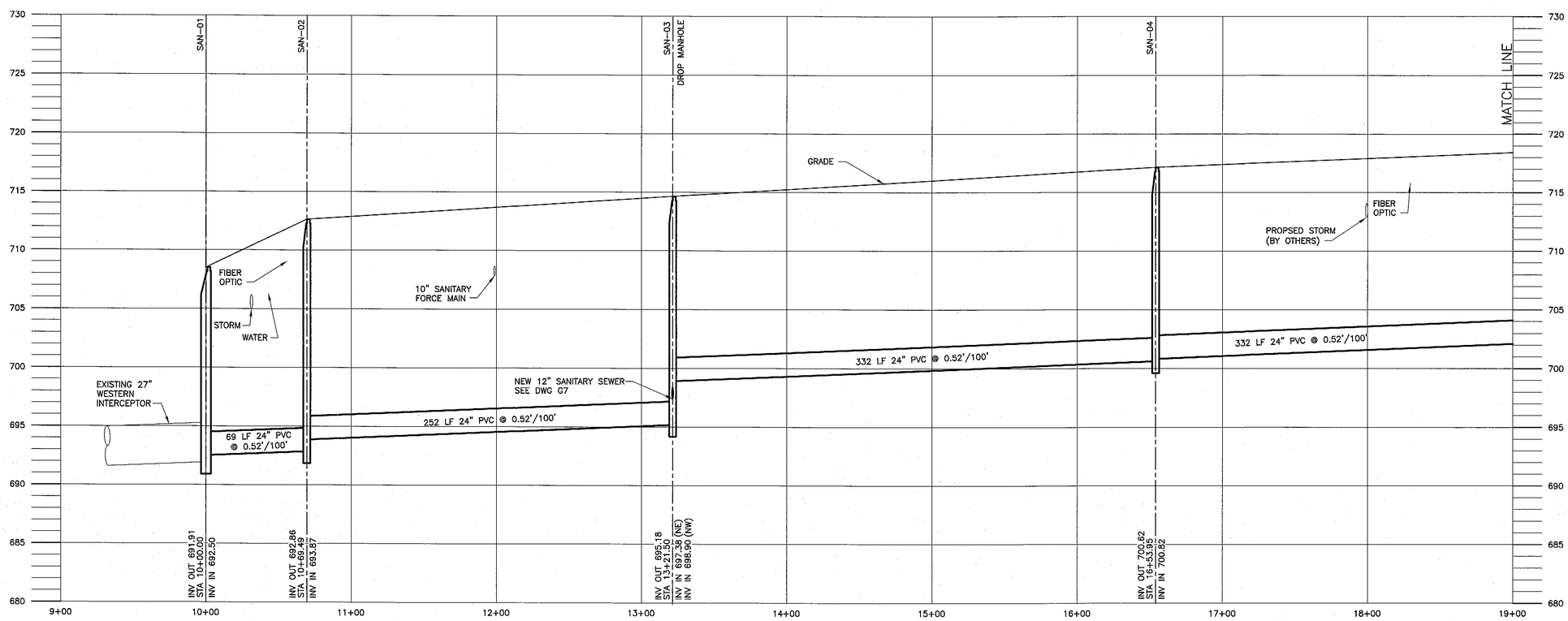

PROFILE

SCALE: 1" = 40' HORIZONTAL
1" = 5' VERTICAL

NOTES:

1. CUT CASING PIPE AS REQUIRED TO INSTALL NEW MANHOLE SAN-03.
2. PLUG ENDS OF ABANDONED CASING PIPE WEST OF STRUCTURE SAN-03 AND FILL WITH GROUT.
3. MAINTAIN STORM SEWER SYSTEM IN SERVICE. REPLACE STORM SEWER DAMAGED BY RECEIVE PIT CONSTRUCTION.

GREELEY AND HANSEN
6640 INTECH BOULEVARD, SUITE 180
INDIANAPOLIS, INDIANA 46278

DESIGNED	KWG	APPROVED
DRAWN	KWG	SEAL AFFIXED JUNE 21, 2011
CHECKED	JMT	

PAUL J. VOGEL REGISTERED No. PE 10200267 STATE OF INDIANA PROFESSIONAL ENGINEER

NO.	DATE	APPD	REVISION

SCALE: 40 0 40 80 FT 1"=40'; 5 0 5 10 FT 1"=5'

CITY OF WEST LAFAYETTE, INDIANA

WESTERN SANITARY SEWER INTERCEPTOR
DIVISION V

GENERAL
NORTHWESTERN AVENUE
SANITARY SEWER
PLAN & PROFILE

FILE NAME	079140G4.DWG
DWG	G4
SHEET	4 OF 24
DATE	JUNE 2011 REV 0

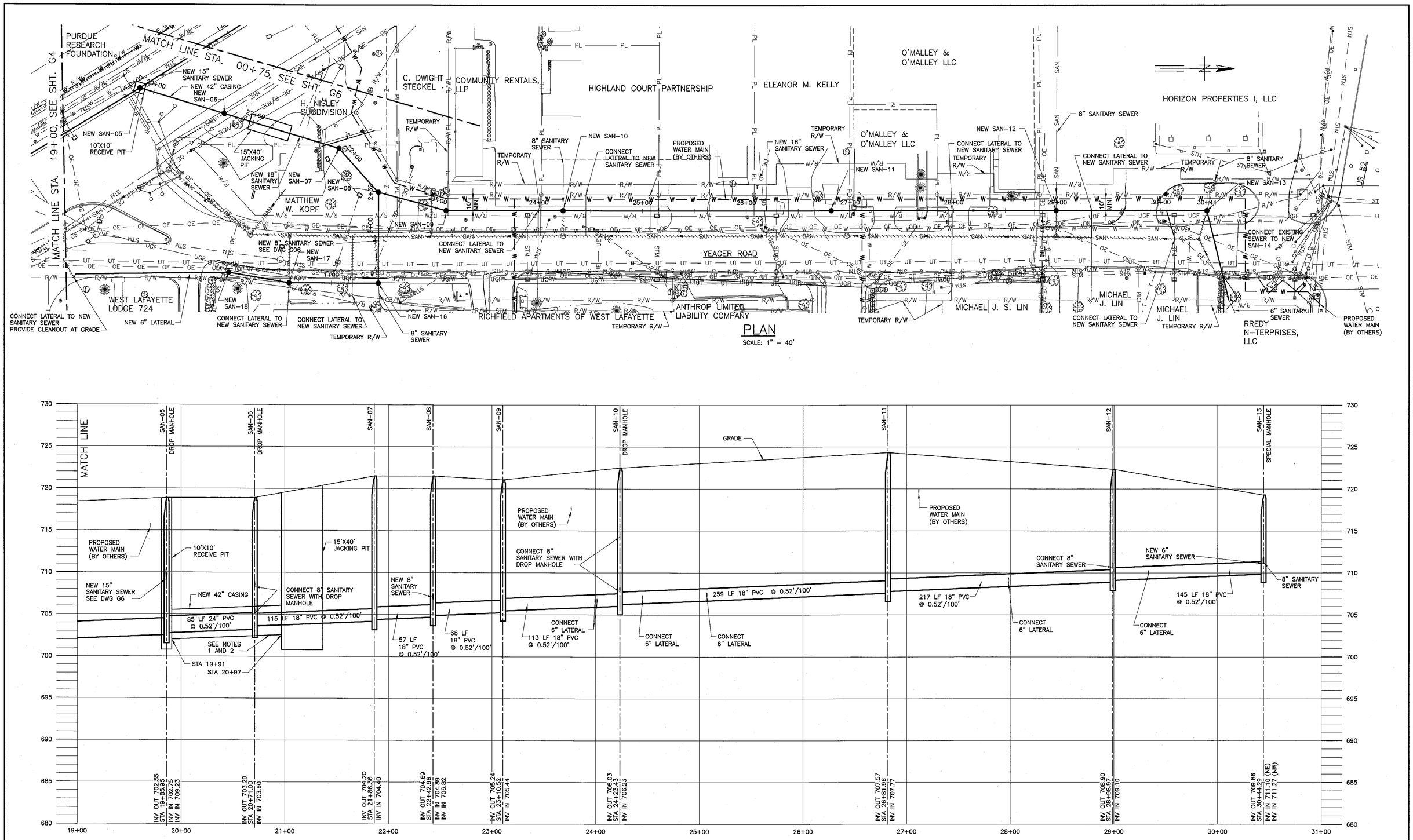

PLAN

SCALE: 1" = 40'

PROFILE

SCALE: 1" = 40' HORIZONTAL
1" = 5' VERTICAL

NOTES:

1. CUT CASING PIPE AS REQUIRED TO INSTALL NEW MANHOLE SAN-03.
2. PLUG ENDS OF ABANDONED CASING PIPE WEST OF STRUCTURE SAN-03 AND FILL WITH GROUT.

GREELEY AND HANSEN
6640 INTECH BOULEVARD, SUITE 180
INDIANAPOLIS, INDIANA 46278

DESIGNED	KWG	APPROVED
DRAWN	KWG	SEAL AFFIXED JUNE 21, 2011
CHECKED	JMT	

PAUL J. VOGEL REGISTERED No. PE 10200267 STATE OF INDIANA PROFESSIONAL ENGINEER

NO.	DATE	APPD	REVISION

SCALE
40 0 40 80 FT 1"=40'
5 0 5 10 FT 1"=5'

CITY OF WEST LAFAYETTE, INDIANA

WESTERN SANITARY SEWER INTERCEPTOR
DIVISION V

GENERAL
YEAGER ROAD
SANITARY SEWER
PLAN & PROFILE

FILE NAME	079140G5.DWG
DWG	G5
SHEET	5 OF 24
DATE	JUNE 2011
REV	0

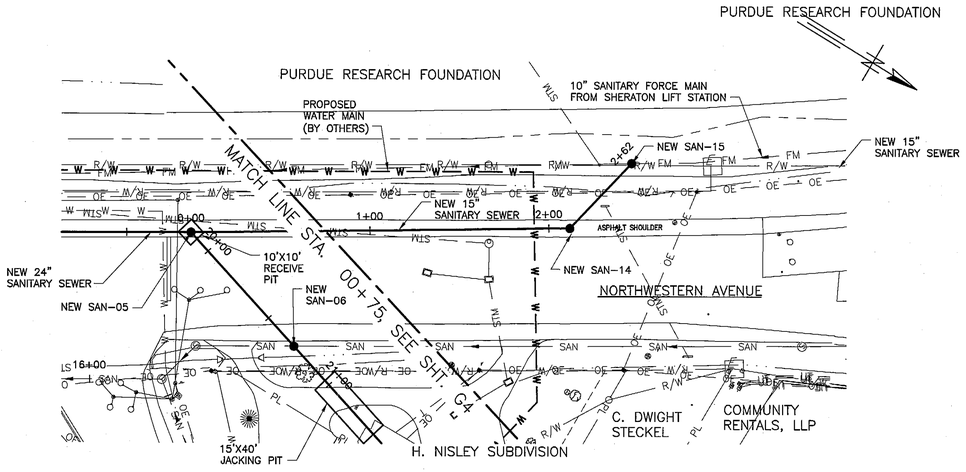

PLAN

SCALE: 1" = 40'

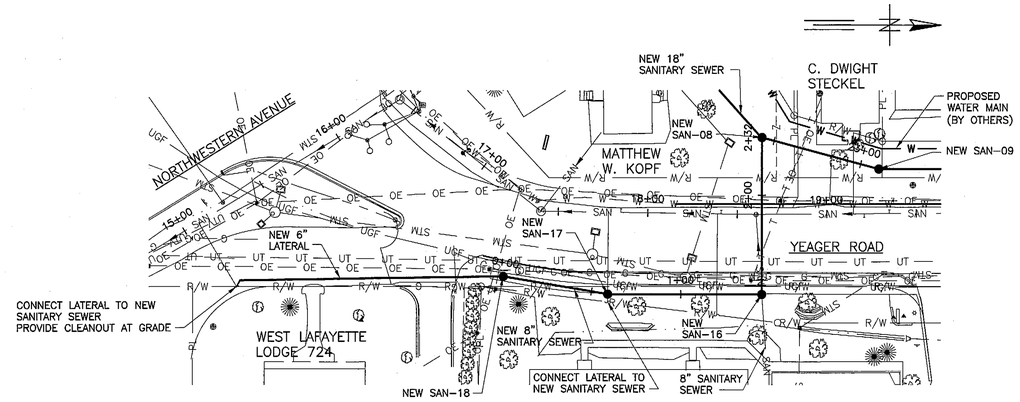

PLAN

SCALE: 1" = 40'

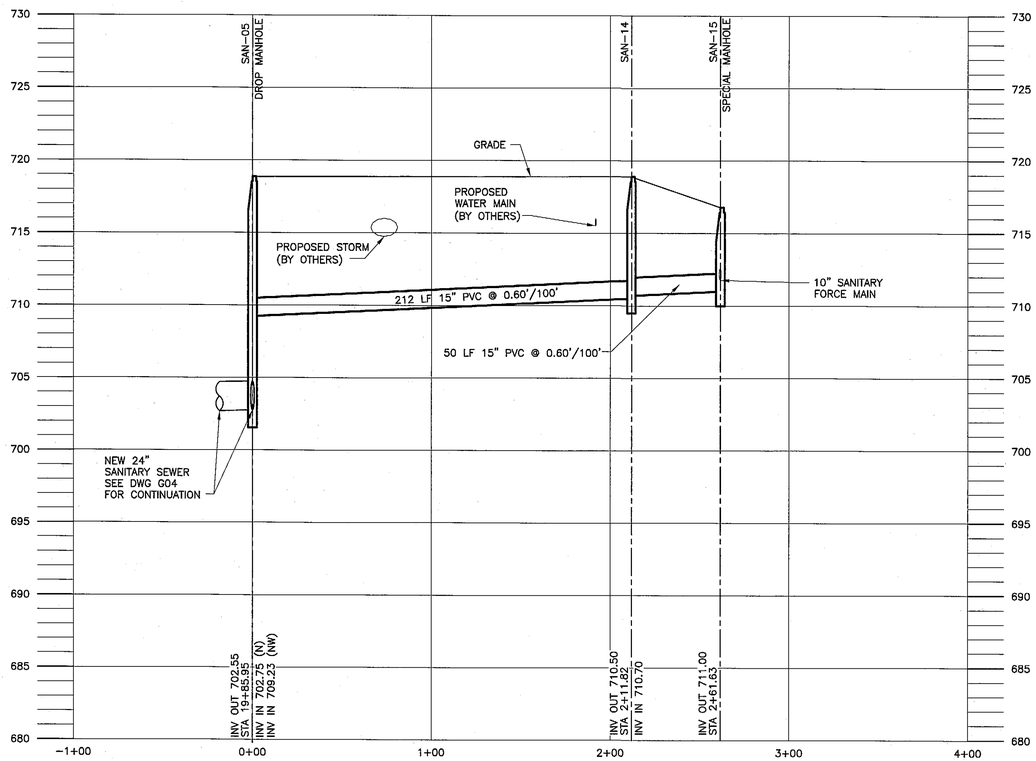

PROFILE

SCALE: 1" = 40' HORIZONTAL
1" = 5' VERTICAL

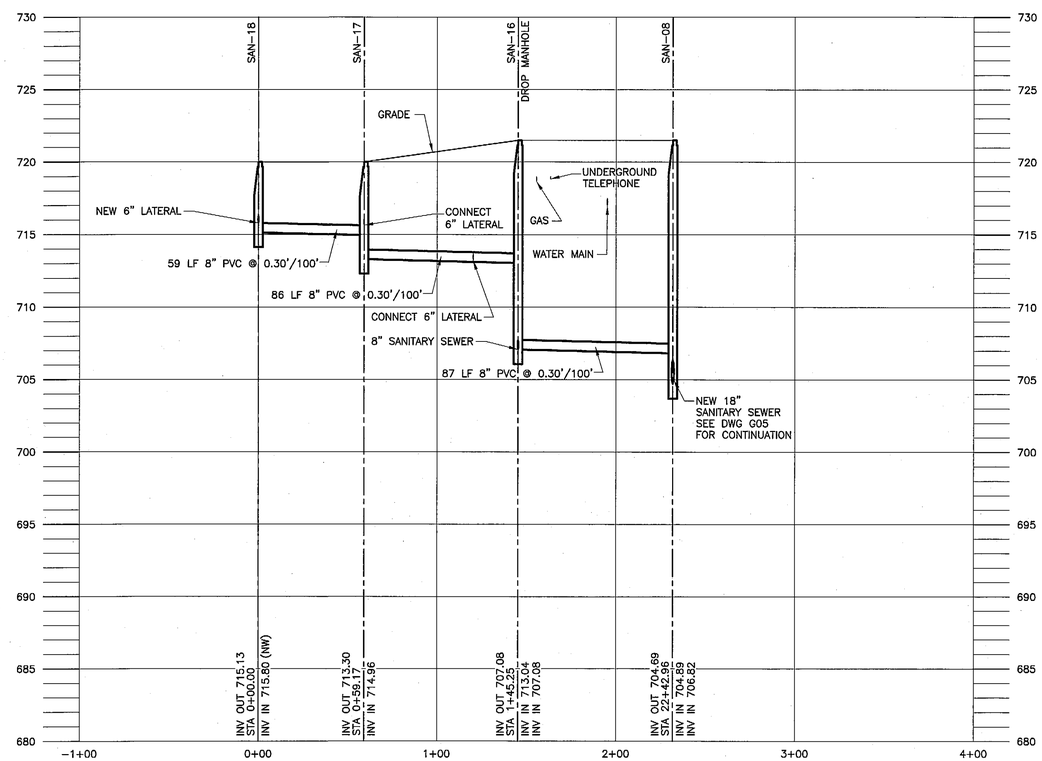

PROFILE

SCALE: 1" = 40' HORIZONTAL
1" = 5' VERTICAL

GREELEY AND HANSEN
6640 INTECH BOULEVARD, SUITE 180
INDIANAPOLIS, INDIANA 46278

DESIGNED	KWG	APPROVED
DRAWN	KWG	SEAL AFFIXED JUNE 21, 2011
CHECKED	JMT	

PAUL J. VOGEL REGISTERED No. PE 10200267 STATE OF INDIANA PROFESSIONAL ENGINEER

NO.	DATE	APPD	REVISION

SCALE
40 0 40 80 FT 1"=40'
5 0 5 10 FT 1"=5'

CITY OF WEST LAFAYETTE, INDIANA

WESTERN SANITARY SEWER INTERCEPTOR
DIVISION V

GENERAL
NORTHWESTERN AVENUE & YEAGER ROAD SANITARY SEWER PLAN & PROFILE

FILE NAME	079140G6.DWG
DWG	G6
SHEET	6 OF 24
DATE	JUNE 2011
REV	0

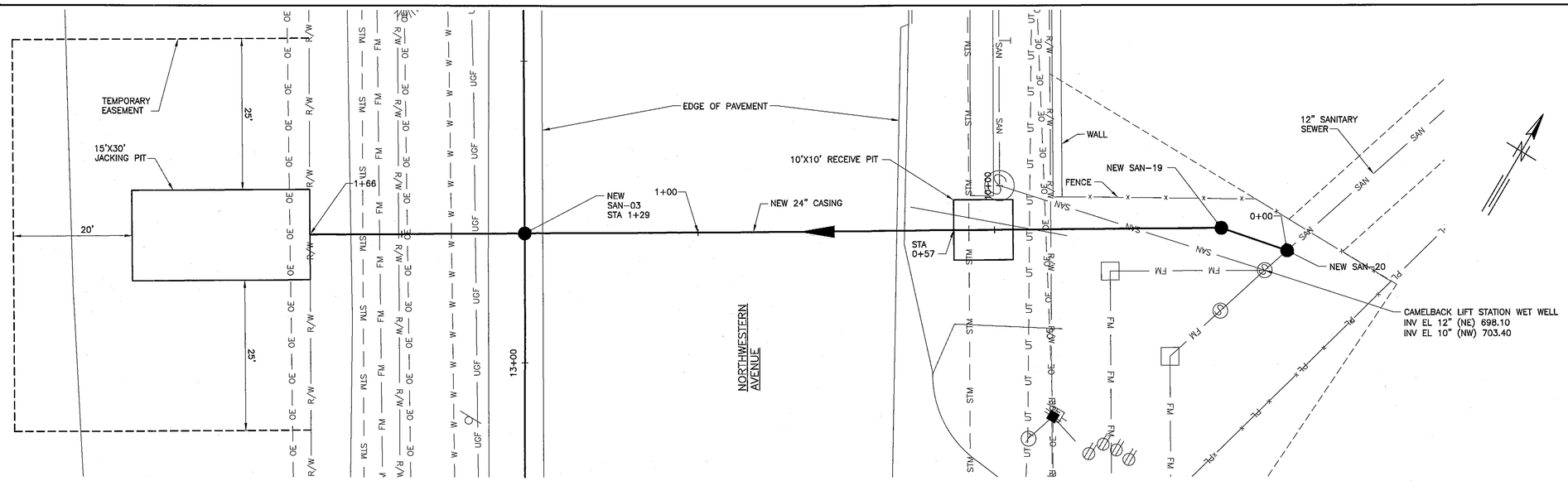

PLAN

SCALE: 1" = 10'

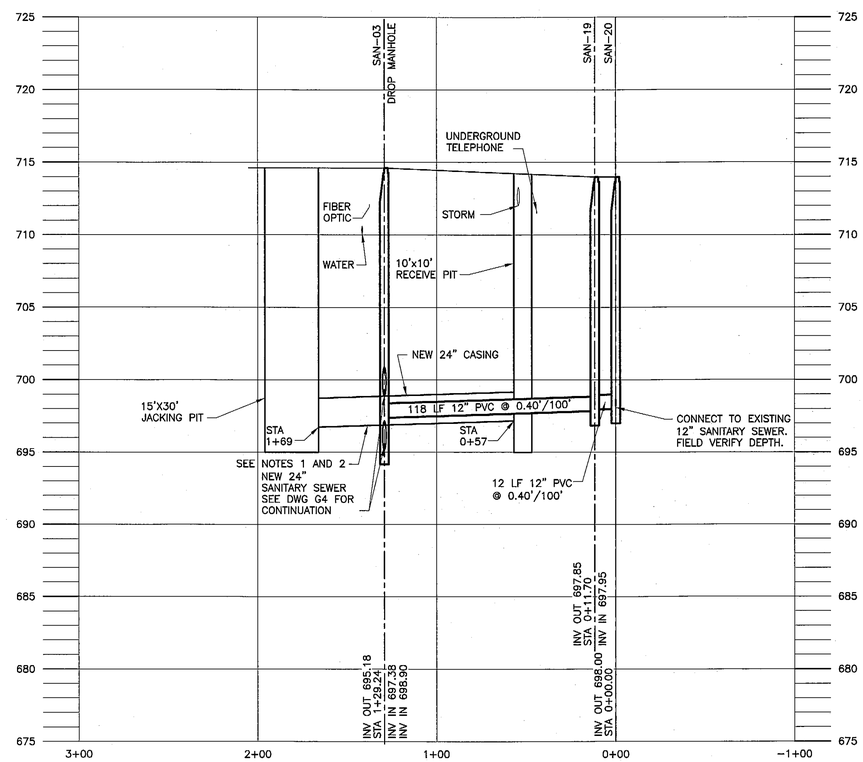

NEW 12" SANITARY SEWER PROFILE

SCALE: 1" = 40' HORIZONTAL
1" = 5' VERTICAL

NOTES:

1. CUT CASING PIPE AS REQUIRED TO INSTALL NEW MANHOLE SAN-03.
2. PLUG ENDS OF ABANDONED CASING PIPE WEST OF STRUCTURE SAN-03 AND FILL WITH GROUT.
3. MAINTAIN STORM SEWER SYSTEM IN SERVICE. REPLACE STORM SEWER DAMAGED BY RECEIVE PIT CONSTRUCTION.

GREELEY AND HANSEN
6640 INTECH BOULEVARD, SUITE 180
INDIANAPOLIS, INDIANA 46278

DESIGNED	KWG	APPROVED
DRAWN	KWG	SEAL AFFIXED JUNE 21, 2011
CHECKED	JMT	

PAUL J. VOGEL REGISTERED No. PE 10200267 STATE OF INDIANA PROFESSIONAL ENGINEER

NO.	DATE	APPD	REVISION

SCALE
40 0 40 80 FT 1"=40'
10 0 10 20 FT 1"=10'
5 0 5 10 FT 1"=5'

CITY OF WEST LAFAYETTE, INDIANA

WESTERN SANITARY SEWER INTERCEPTOR
DIVISION V

GENERAL
CAMELBACK LIFT STATION AND SANITARY SEWER PLAN & PROFILE

FILE NAME	079140G7.DWG
DWG	G7
SHEET	7 OF 24
DATE	JUNE 2011
REV	0

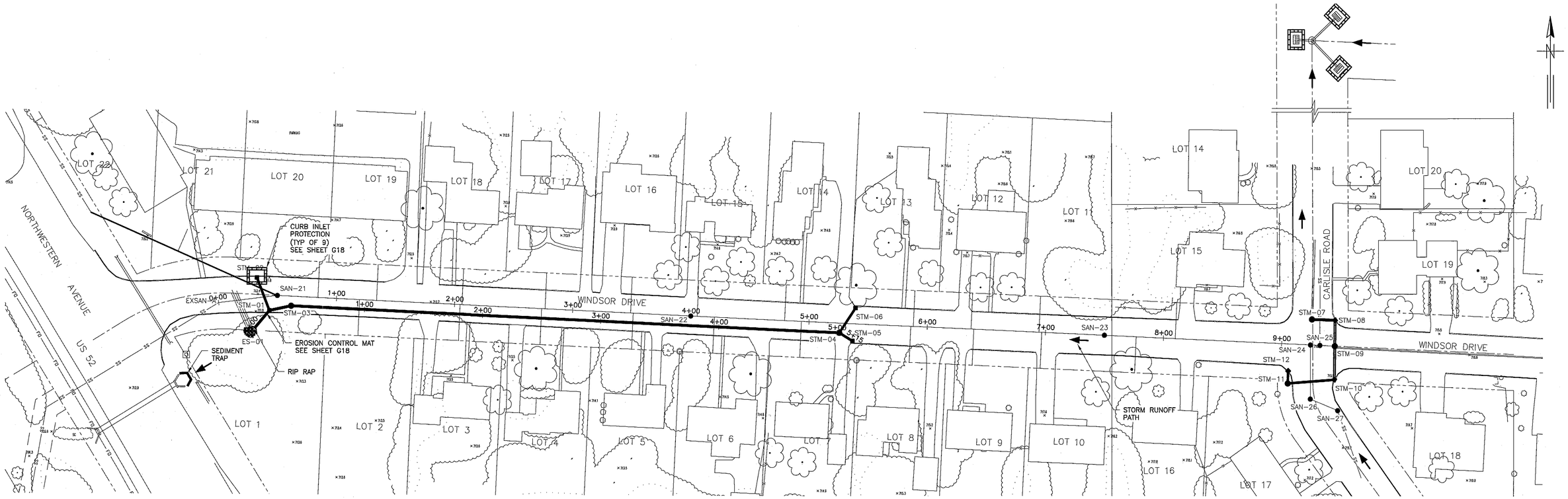

WINDSOR DRIVE

SCALE: 1" = 40'

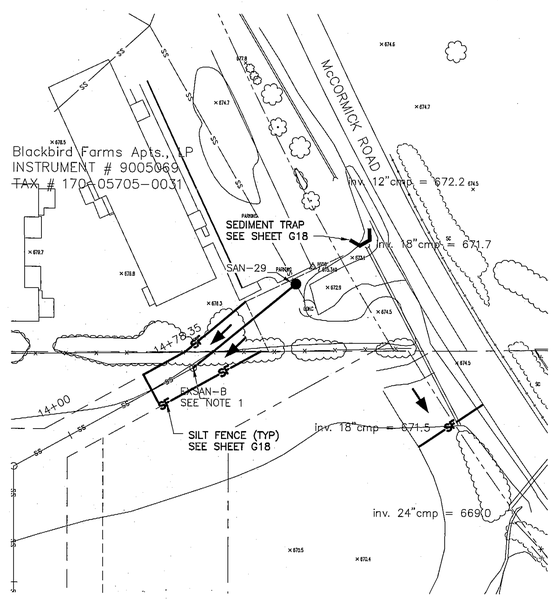

BLACKBIRD POND LIFT STATION

SCALE: 1" = 40'

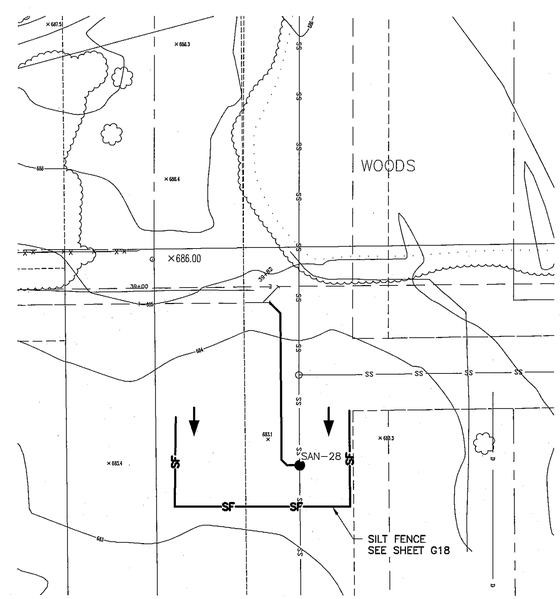

GREEN MEADOW LIFT STATION OUTLET

SCALE: 1" = 40'

GREELEY AND HANSEN 6640 INTECH BOULEVARD, SUITE 180 INDIANAPOLIS, INDIANA 46278	DESIGNED KRN DRAWN RKY CHECKED JMT	APPROVED SEAL AFFIXED JUNE 21, 2011	PAUL J. VOGE REGISTERED No. PE 10200267 STATE OF INDIANA PROFESSIONAL ENGINEER	NO. DATE APPD REVISION	SCALE 40 0 40 80 FT 1"=40'	CITY OF WEST LAFAYETTE, INDIANA WESTERN SANITARY SEWER INTERCEPTOR DIVISION V	CIVIL WINDSOR DRIVE, BLACKBIRD POND, GREEN MEADOWS EROSION CONTROL PLANS	FILE NAME 079140G8.DWG DWG G8 SHEET 8 OF 24 DATE JUNE 2011 REV 0

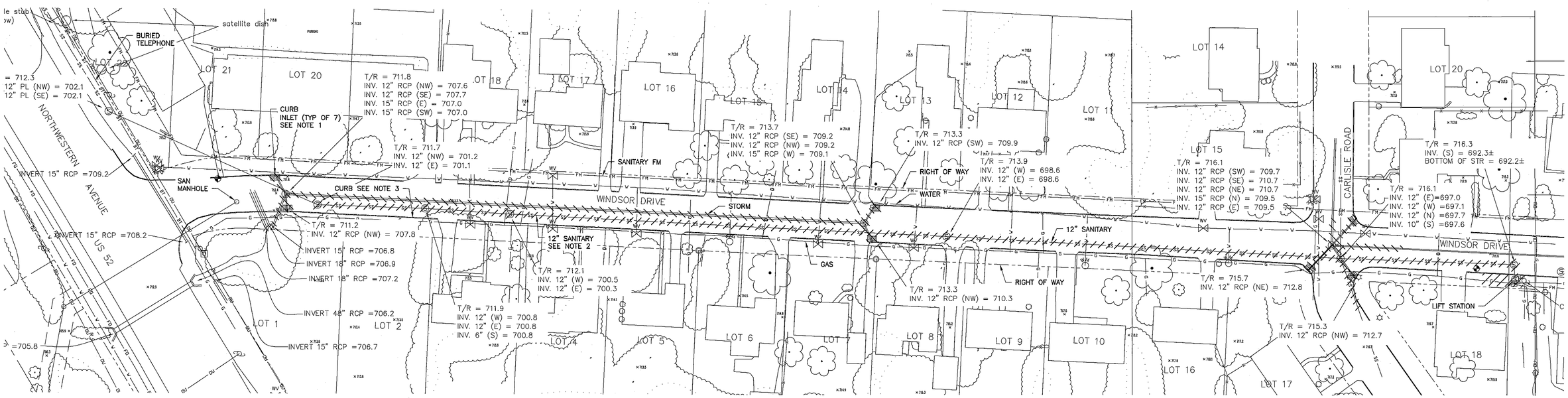

PLAN – DEMOLITION

SCALE: 1" = 40'

NOTES:

1. REMOVE THE EXISTING STORM SEWER AND CURB INLETS AS SHOWN.
2. ABANDON SANITARY AND STORM SEWERS NOT REMOVED BY NEW CONSTRUCTION IN ACCORDANCE WITH SPECIFICATION SECTION 02050.
3. REMOVE EXISTING CURB AND GUTTER BOTH SIDES OF STREET TO PAVEMENT IMPROVEMENTS LIMITS SHOWN ON SHEET G14.

FILE: 079140G10 1:1 02/15/11 13:57 GH-A

GREELEY AND HANSEN 6640 INTECH BOULEVARD, SUITE 180 INDIANAPOLIS, INDIANA 46278	DESIGNED KRN DRAWN RKY CHECKED JMT	APPROVED SEAL AFFIXED JUNE 21, 2011	PAUL J. VOGT REGISTERED No. PE 10200267 STATE OF INDIANA PROFESSIONAL ENGINEER	NO. DATE APPD REVISION	SCALE 40 0 40 80 FT 1"=40'	CITY OF WEST LAFAYETTE, INDIANA WESTERN SANITARY SEWER INTERCEPTOR DIVISION V	GENERAL WINDSOR DRIVE SANITARY & STORM SEWER DEMOLITION PLAN

FILE NAME	079140G9.DWG
DWG	G9
SHEET	9 OF 24
DATE	JUNE 2011 REV 0

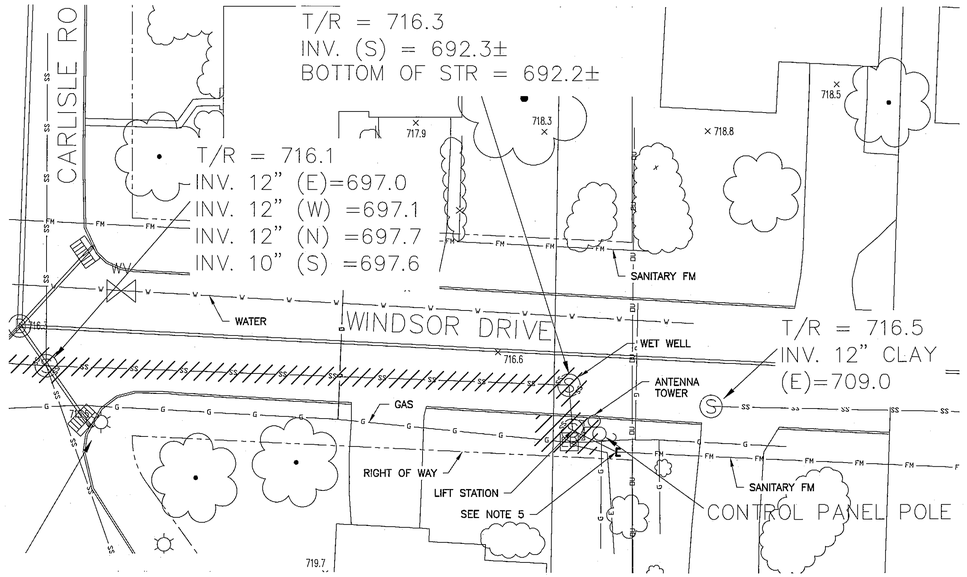

PLAN – DEMOLITION

SCALE: 1" = 20'

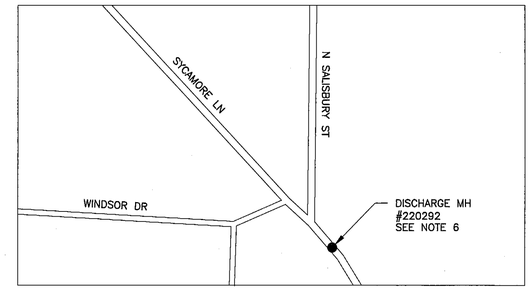

PLAN – WINDSOR DR LIFT STATION DISCHARGE

SCALE: NOT TO SCALE

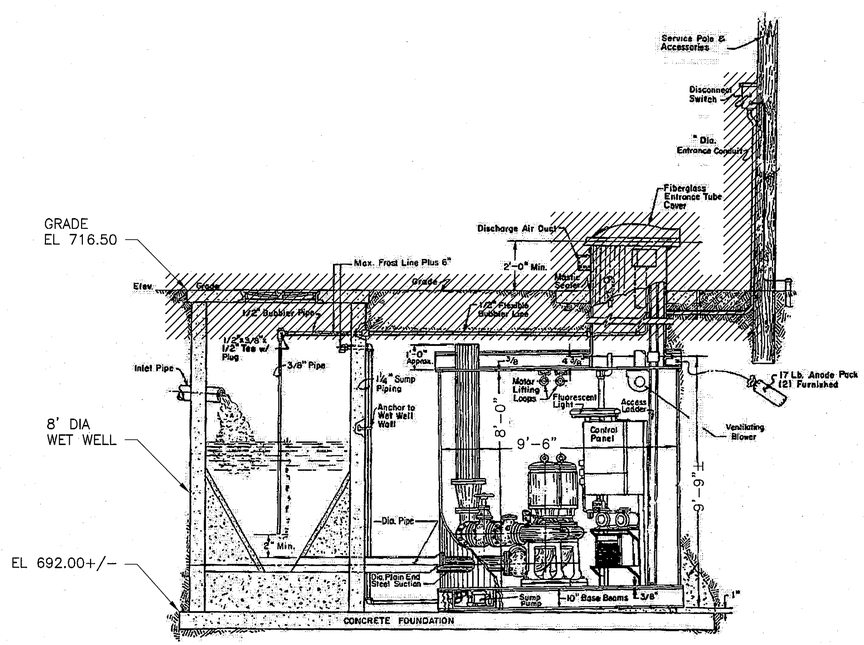

SECTION – DEMOLITION

SCALE: NOT TO SCALE

LIFT STATION DEMOLITION NOTES:

1. CROSS HATCH INDICATES REMOVAL OF STRUCTURES, PIPING AND EQUIPMENT.
2. CONTRACTOR SHALL INSPECT THE SITE PRIOR TO BIDDING PROJECT TO SEE EXTENT OF THE DEMOLITION WORK INVOLVED AND TO INCLUDE THE NECESSARY WORK IN BID.
3. DEMOLISH EXISTING LIFT STATION TO 24" BELOW GRADE. CORE DRILL FOUR 6" DIA HOLES IN BOTTOM OF WET WELL FOR DRAINAGE. FILL LIFT STATION AND WET WELL WITH SAND TO 24" BELOW GRADE. BACKFILL TOP 24" WITH SOIL, COMPACT AND SEED IN GRASSY AREAS. BACKFILL TOP 24" WITH NO. 53 COMPACTED AGGREGATE AND PAVE IMPROVED AREAS.
4. ALL ABOVE GROUND ELECTRICAL COMPONENTS, CONDUIT AND WIRING, ANTENNA TOWER, AND SUPPORT STRUCTURES SHALL BE DEENERGIZED, DISCONNECTED AND REMOVED.
5. FIELD LOCATE THE FORCE MAIN. INSTALL END CAP ON FORCE MAIN TO BE ABANDONED IN PLACE.
6. REMOVE FORCE MAIN PIPING AND SUPPORTS FROM MANHOLE WALL AND INSTALL GROUT PLUG AT THE OPENING. GROUT ANY VOIDS LEFT IN MANHOLE WALLS FROM PIPING REMOVAL.

FILE: 079140G01 1:1 12/28/10 14:04 GH-A

GREELEY AND HANSEN
6640 INTECH BOULEVARD, SUITE 180
INDIANAPOLIS, INDIANA 46278

DESIGNED	KRN	APPROVED
DRAWN	RKY	SEAL AFFIXED JUNE 21, 2011
CHECKED	JMT	

PAUL J. VOGEL REGISTERED No. PE 10200267 STATE OF INDIANA PROFESSIONAL ENGINEER

NO.	DATE	APPD	REVISION

SCALE 20 0 20 40 FT 1"=20'

CITY OF WEST LAFAYETTE, INDIANA

WESTERN SANITARY SEWER INTERCEPTOR
DIVISION V

GENERAL
WINDSOR DRIVE
LIFT STATION DEMOLITION
PLAN & SECTION

FILE NAME	079140G10.DWG
DWG	G10
SHEET	10 OF 24
DATE	JUNE 2011 REV 0

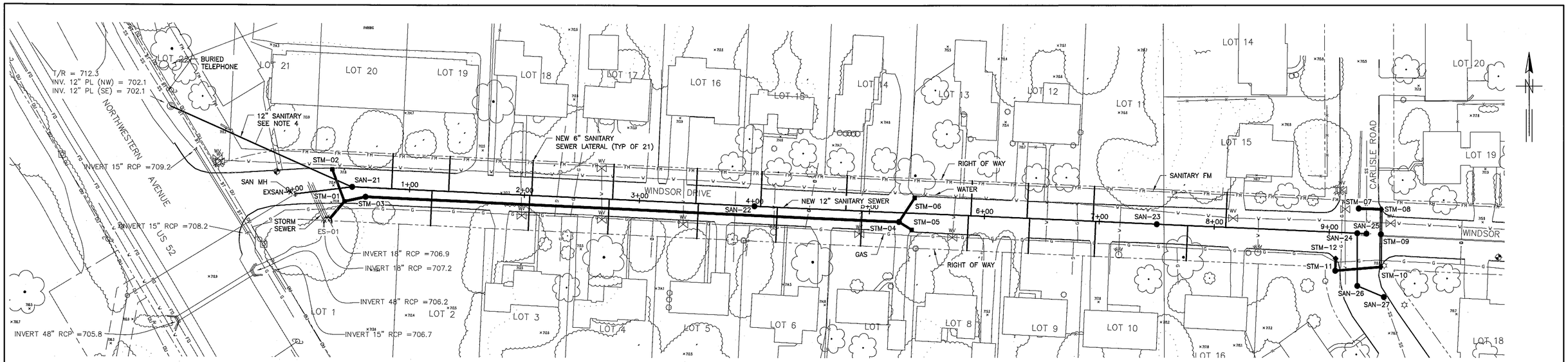

PLAN

SCALE: 1" = 40'

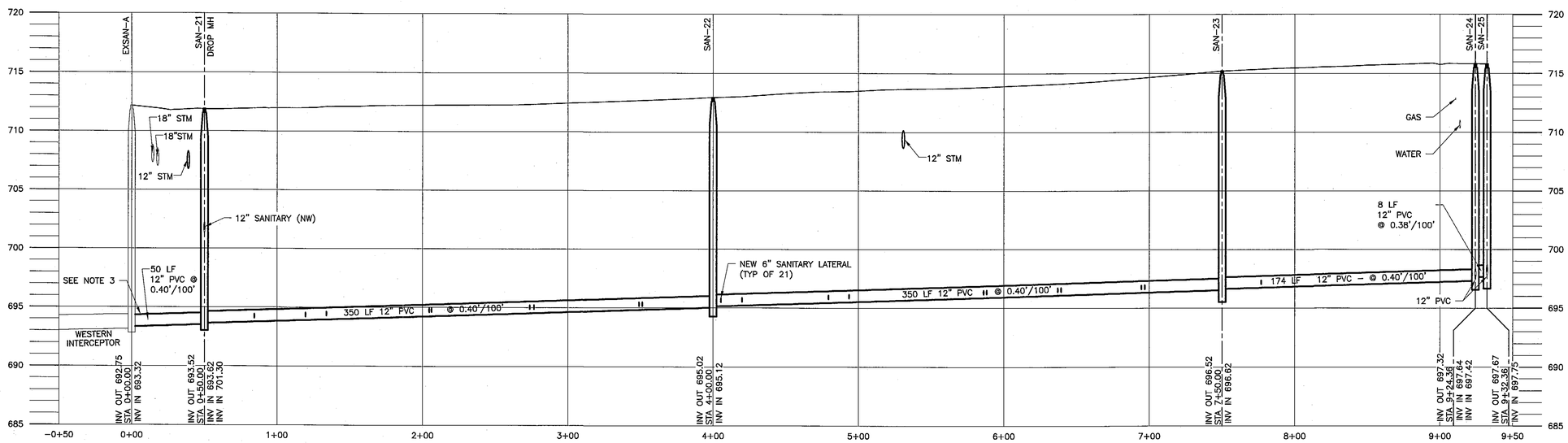

PROFILE

SCALE: 1" = 40' HORIZONTAL
1" = 5' VERTICAL

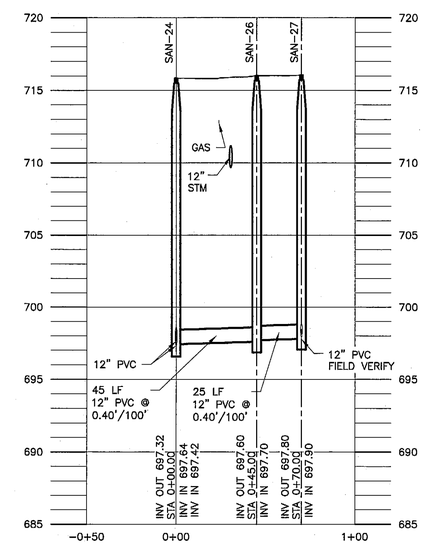

PROFILE

SCALE: 1" = 40' HORIZONTAL
1" = 5' VERTICAL

NEW SANITARY SEWER NOTES:

1. CONTRACTOR TO VERIFY BY CCTV INSPECTION ALL ACTIVE SANITARY LATERALS TO BE DISCONNECTED FROM EXISTING 12" SANITARY SEWER. CONNECT ALL ACTIVE SANITARY LATERALS TO NEW 12" SANITARY SEWER IN ACCORDANCE WITH SPECIFICATION SECTION 02762.
2. PLUG ABANDONED LATERAL CONNECTIONS TO EXISTING SANITARY SEWER IN ACCORDANCE WITH SPECIFICATION SECTION 02050.
3. CORE DRILL OPENING IN MH EXSAN-A AND PROVIDE FLEXIBLE BOOT TO CONNECT NEW SANITARY SEWER.
4. REHABILITATE EXISTING 12" SANITARY SEWER USING CURED-IN-PLACE PIPE IN ACCORDANCE WITH SPEC SECTION 02765.

GREELEY AND HANSEN
6640 INTECH BOULEVARD, SUITE 180
INDIANAPOLIS, INDIANA 46278

DESIGNED	KRN	APPROVED
DRAWN	RKY	SEAL AFFIXED JUNE 21, 2011
CHECKED	JMT	

PAUL J. VOGEL REGISTERED No. PE 10200267 STATE OF INDIANA PROFESSIONAL ENGINEER

NO.	DATE	APPD	REVISION

SCALE
40 0 40 80 FT 1"=40'
5 0 5 10 FT 1"=5'

CITY OF WEST LAFAYETTE, INDIANA

WESTERN SANITARY SEWER INTERCEPTOR
DIVISION V

CIVIL

WINDSOR DRIVE
SANITARY SEWER PLAN & PROFILE

FILE NAME 079140G11.DWG
DWG G11
SHEET 11 OF 24
DATE JUNE 2011 REV 0

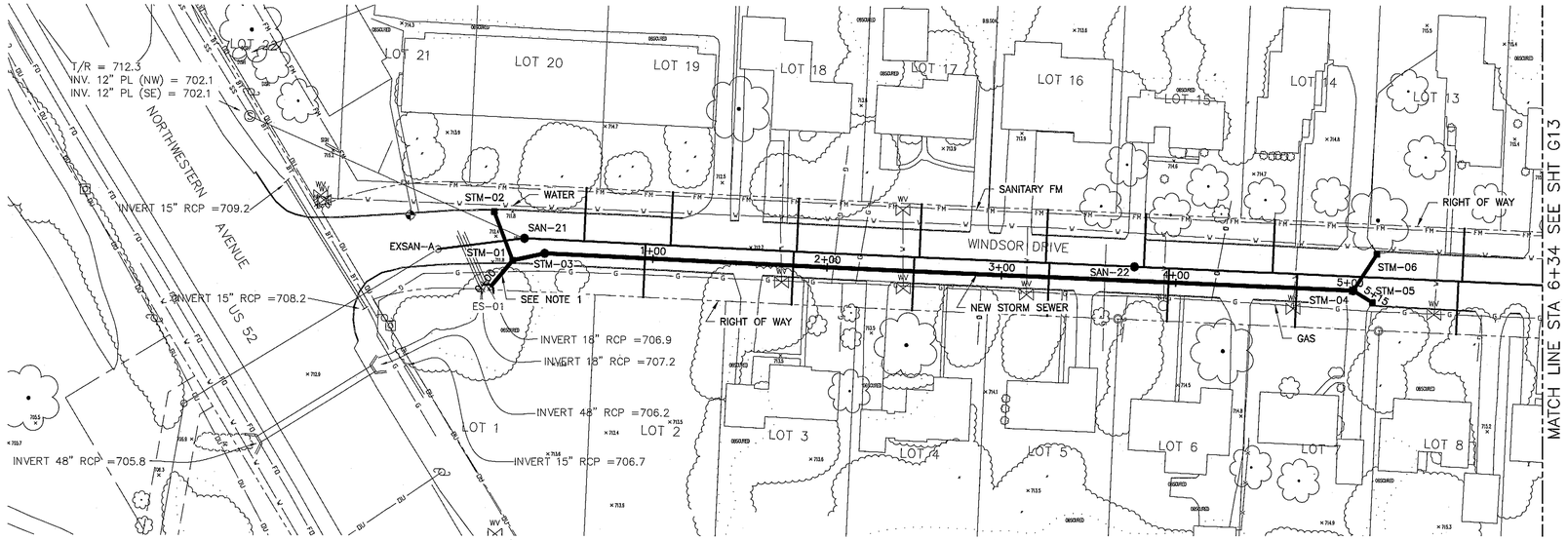

PLAN

SCALE: 1" = 40'

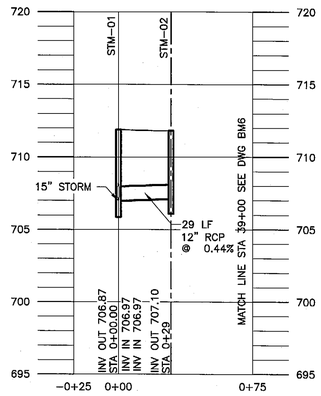

PROFILE

SCALE: 1" = 40' HORIZONTAL
1" = 5' VERTICAL

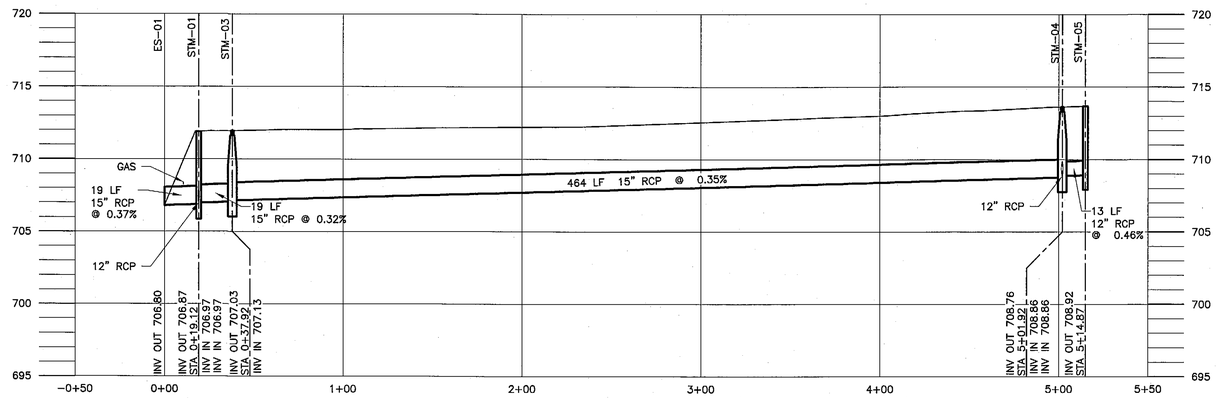

PROFILE

SCALE: 1" = 40' HORIZONTAL
1" = 5' VERTICAL

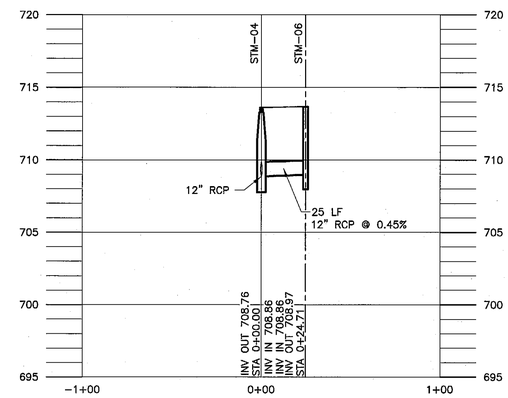

PROFILE

SCALE: 1" = 40' HORIZONTAL
1" = 5' VERTICAL

NOTES:

1. ADJUST LOCATION OF WATER MAIN TO ACCOMMODATE NEW STORM SEWER.

GREELEY AND HANSEN 6640 INTECH BOULEVARD, SUITE 180 INDIANAPOLIS, INDIANA 46278	DESIGNED KRN DRAWN RKY CHECKED JMT	APPROVED SEAL AFFIXED JUNE 21, 2011	NO. DATE APPD REVISION	SCALE 40 0 40 80 FT 1"=40' 5 0 5 10 FT 1"=5'	CITY OF WEST LAFAYETTE, INDIANA WESTERN SANITARY SEWER INTERCEPTOR DIVISION V	GENERAL WINDSOR DRIVE STORM SEWER PLAN & PROFILE	FILE NAME 079140G12.DWG DWG G12 SHEET 12 OF 24 DATE JUNE 2011 REV 0

PAUL J. VOGEL REGISTERED No. PE 10200267 STATE OF INDIANA PROFESSIONAL ENGINEER

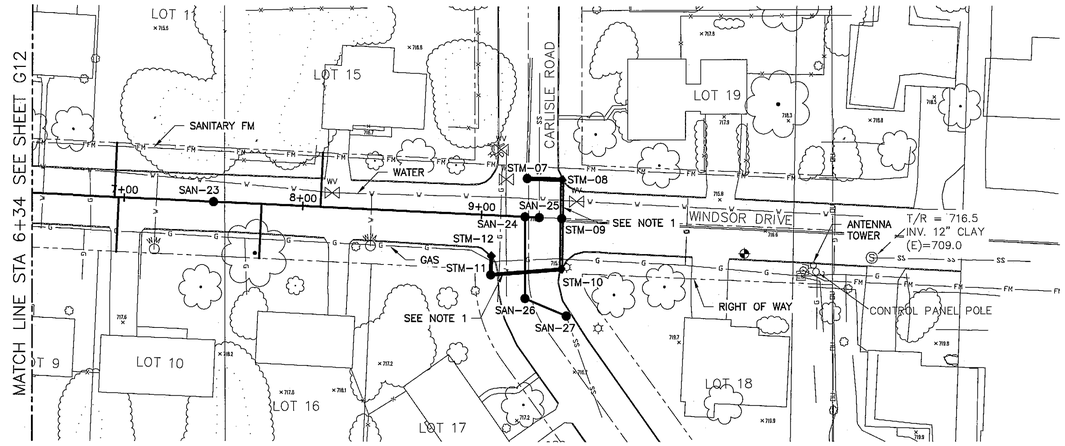

PLAN

SCALE: 1" = 40'

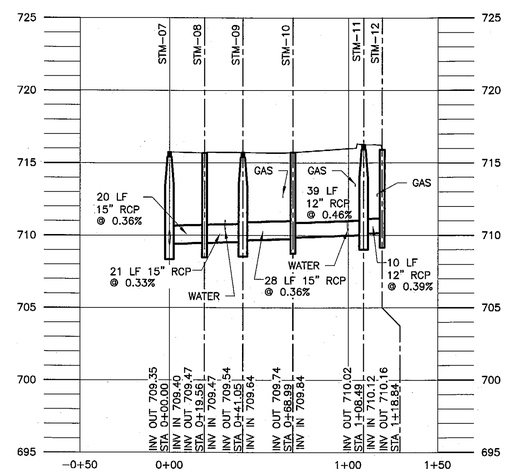

PROFILE

SCALE: 1" = 40' HORIZONTAL
1" = 5' VERTICAL

NOTES:

1. ADJUST LOCATION OF WATER MAIN AND GAS MAIN TO ACCOMMODATE NEW STORM SEWER.

GREELEY AND HANSEN 6640 INTECH BOULEVARD, SUITE 180 INDIANAPOLIS, INDIANA 46278	DESIGNED KRN DRAWN RKY CHECKED JMT	APPROVED SEAL AFFIXED JUNE 21, 2011	PAUL J. VOGE REGISTERED No. PE 10200267 STATE OF INDIANA PROFESSIONAL ENGINEER	NO. DATE APPD REVISION	SCALE 40 0 40 80 FT 1"=40' 5 0 5 10 FT 1"=5'	CITY OF WEST LAFAYETTE, INDIANA WESTERN SANITARY SEWER INTERCEPTOR DIVISION V	GENERAL WINDSOR DRIVE STORM SEWER PLAN & PROFILE

FILE NAME	079140G13.DWG
DWG	G13
SHEET	13 OF 24
DATE	JUNE 2011 REV 0

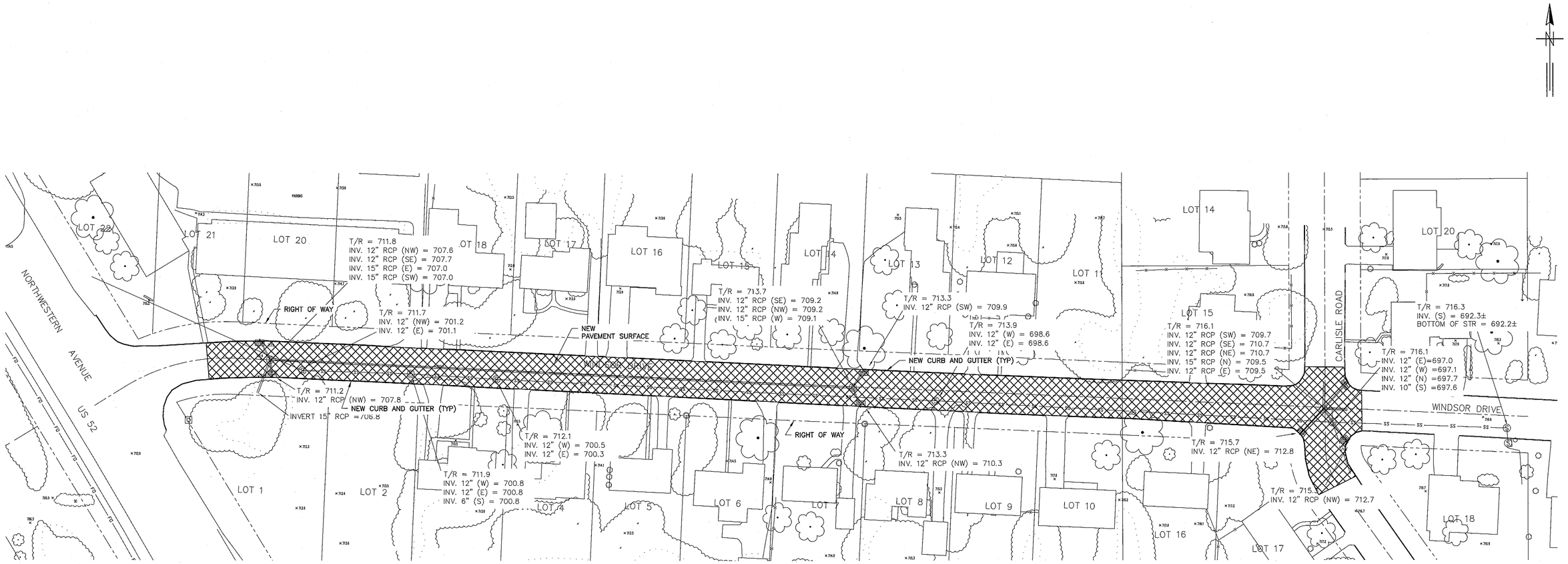

PAVEMENT IMPROVEMENT PLAN

SCALE: 1" = 40'

NOTES:

1. REPLACE PAVEMENT FROM PIPELINE CONSTRUCTION IN ACCORDANCE WITH TRENCH DETAIL ON SHEET G20 AND PAVEMENT REPLACEMENT DETAIL ON SHEET G22.
2. MILL REMAINING PAVEMENT SURFACE NOT DISTURBED BY PIPELINE CONSTRUCTION TO THE LIMITS SHOWN. NEW PAVEMENT SURFACE TO BE IN ACCORDANCE WITH THE DETAIL ON SHEET G22.

GREELEY AND HANSEN 6640 INTECH BOULEVARD, SUITE 180 INDIANAPOLIS, INDIANA 46278	DESIGNED KRN DRAWN RKY CHECKED JMT	APPROVED SEAL AFFIXED JUNE 21, 2011 PAUL J. VOGEL REGISTERED No. PE 10200267 STATE OF INDIANA PROFESSIONAL ENGINEER	NO. DATE APPD REVISION	SCALE 40 0 40 80 FT 1"=40'	CITY OF WEST LAFAYETTE, INDIANA WESTERN SANITARY SEWER INTERCEPTOR DIVISION V	CIVIL WINDSOR DRIVE PAVEMENT IMPROVEMENT PLAN	FILE NAME 079140G14.DWG DWG G14 SHEET 14 OF 24 DATE JUNE 2011 REV 0

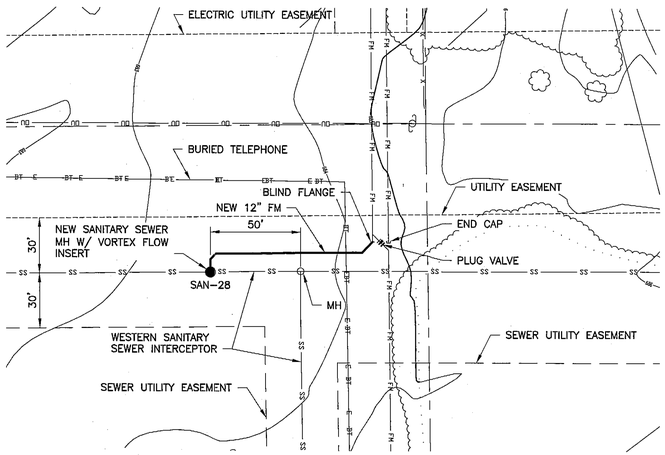

PLAN

SCALE: 1" = 40'

NOTES:

1. LOCATE BLIND FLANGE ON EXISTING SANITARY FORCE MAIN. COORDINATE CONNECTION OF NEW FORCE MAIN TO EXISTING WITH CITY OF WEST LAFAYETTE.
2. RESTRAIN ALL FORCE MAIN PIPE 20 FEET ON BOTH SIDES OF FITTINGS.

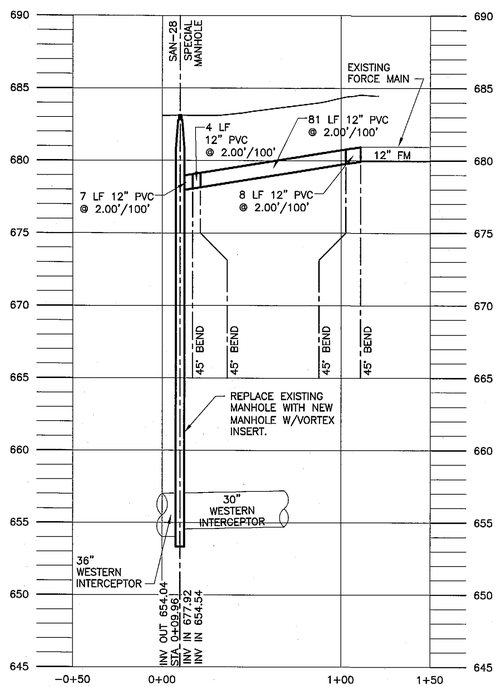

PROFILE

SCALE: 1" = 40' HORIZONTAL
1" = 5' VERTICAL

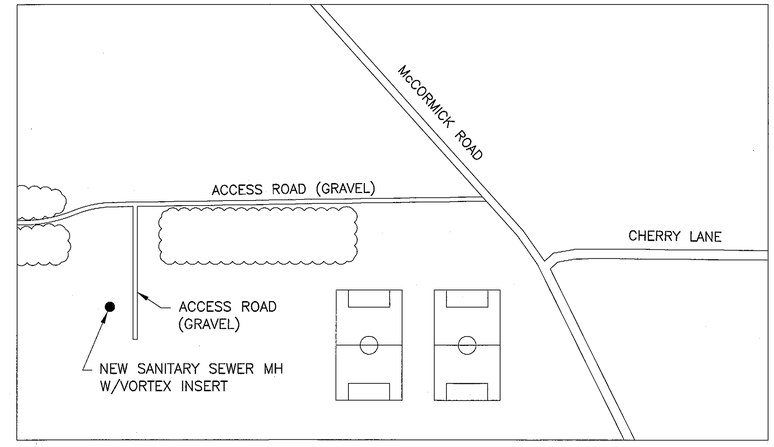

NOTES:

1. RESTORE ALL ACCESS POINTS WHICH ARE DAMAGED OR DISTURBED BY CONSTRUCTION OPERATIONS, INCLUDING GRAVEL, PAVED, AND SEEDED AREAS TO PRECONSTURCTION CONDITIONS.
2. MAINTAIN CONSTRUCTION ACCESS ROADS AT ALL TIMES THROUGHOUT THE CONSTRUCTION PROJECT TO ALLOW PURDUE UNIVERSITY PERSONNEL ACCESS TO FACILITIES.

CONSTRUCTION ACCESS ROAD

SCALE: NOT TO SCALE

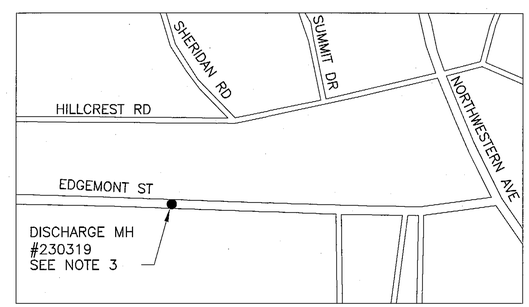

PLAN – GREEN MEADOWS LIFT STATION DISCHARGE

SCALE: NOT TO SCALE

FORCE MAIN DEMOLITION NOTES:

1. REMOVE FORCE MAIN PIPE AND SUPPORTS FROM MANHOLE WALL AND INSTALL GROUT PLUG AT THE OPENING. GROUT ANY VOIDS LEFT IN MANHOLE WALLS FROM PIPING REMOVAL.

GREELEY AND HANSEN 6640 INTECH BOULEVARD, SUITE 180 INDIANAPOLIS, INDIANA 46278	DESIGNED KRN DRAWN RKY CHECKED JMT	APPROVED SEAL AFFIXED JUNE 21, 2011	PAUL J. VOGEL REGISTERED No. PE 10200267 STATE OF INDIANA PROFESSIONAL ENGINEER	NO. DATE APPD REVISION	SCALE 40 0 40 80 FT 1"=40' 5 0 5 10 FT 1"=5'	CITY OF WEST LAFAYETTE, INDIANA WESTERN SANITARY SEWER INTERCEPTOR DIVISION V	CIVIL GREEN MEADOWS LIFT STATION FORCE MAIN PLAN & PROFILE

FILE NAME	079140AG15.DWG
DWG	G15
SHEET	15 OF 24
DATE	JUNE 2011 REV 0

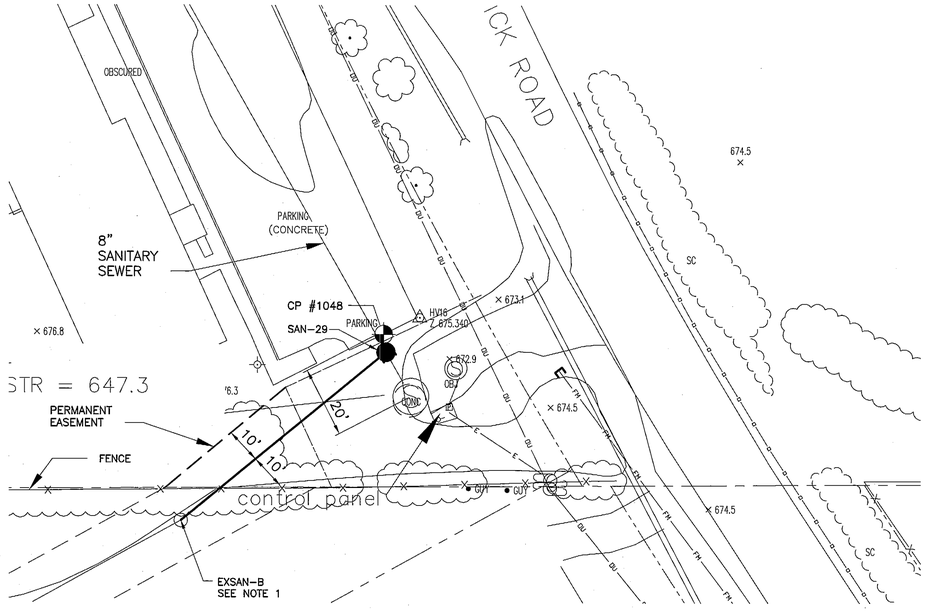

PLAN

SCALE: 1" = 20'

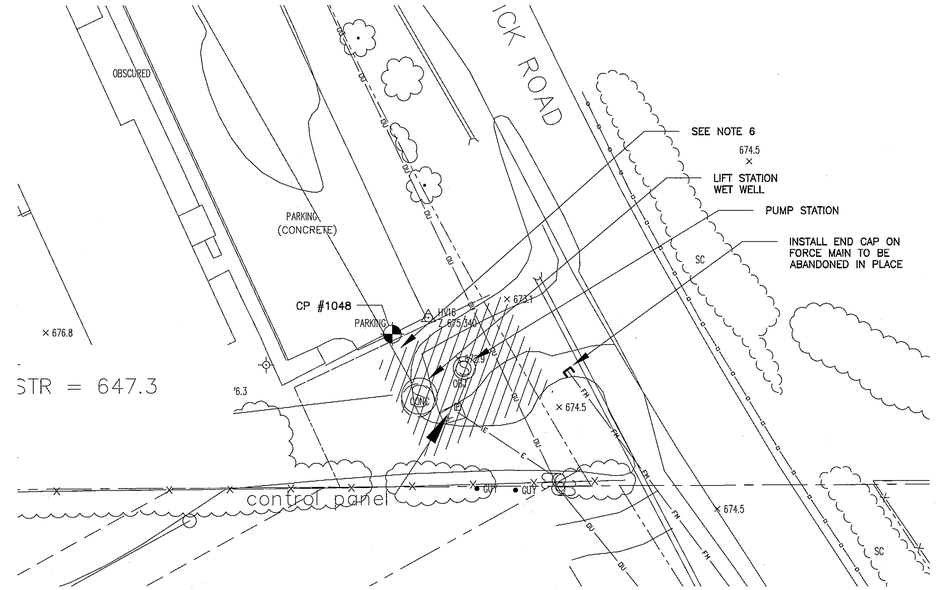

PLAN – DEMOLITION

SCALE: 1" = 20'

NOTES:

1. CORE DRILL OPENING IN MH EXSAN-B AND PROVIDE FLEXIBLE BOOT TO CONNECT NEW SANITARY SEWER.

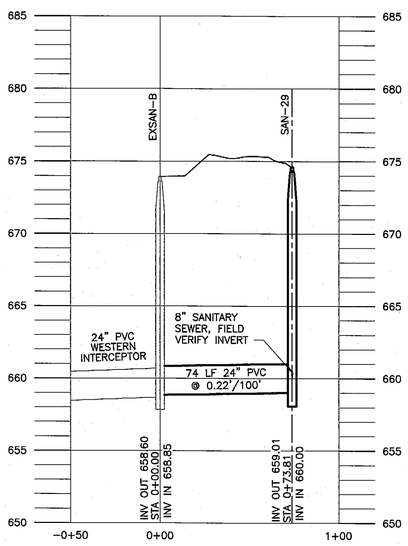

PROFILE

SCALE: 1" = 40' HORIZONTAL
1" = 5' VERTICAL

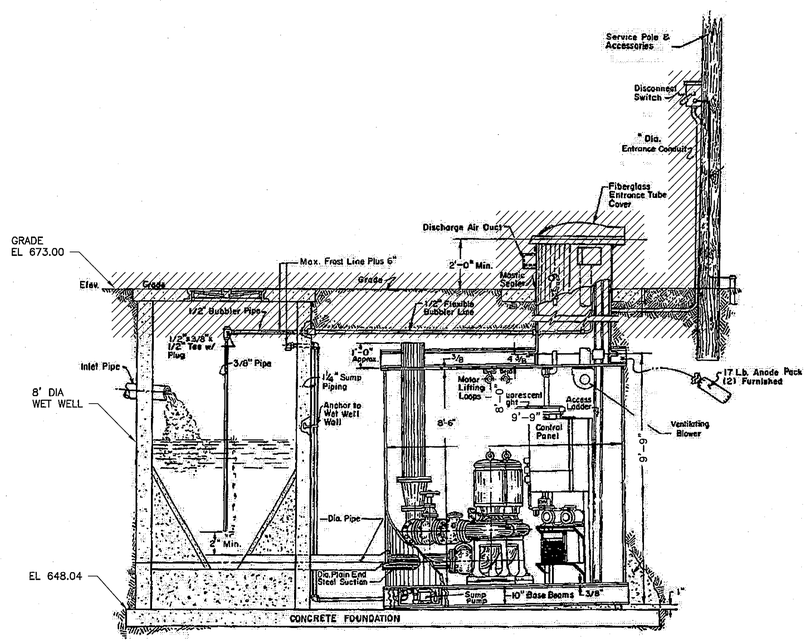

SECTION – DEMOLITION

NOT TO SCALE

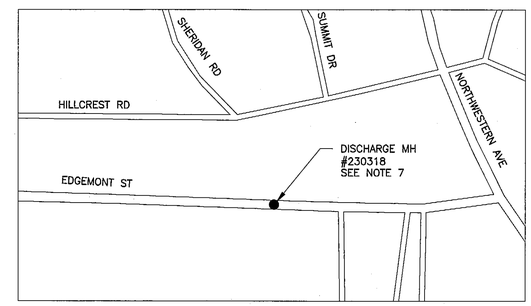

PLAN – BLACKBIRD POND LIFT STATION DISCHARGE

SCALE: NOT TO SCALE

LIFT STATION DEMOLITION NOTES:

1. CROSS HATCH INDICATES REMOVAL OF STRUCTURES, PIPING AND EQUIPMENT.
2. CONTRACTOR SHALL INSPECT THE SITE PRIOR TO BIDDING PROJECT TO SEE EXTENT OF THE DEMOLITION WORK INVOLVED AND TO INCLUDE THE NECESSARY WORK IN BID.
3. DEMOLISH EXISTING LIFT STATION TO 24" BELOW GRADE. CORE DRILL FOUR 6" DIA HOLES IN BOTTOM OF WET WELL FOR DRAINAGE. FILL LIFT STATION AND WET WELL WITH SAND TO 12" BELOW GRADE. BACKFILL TOP 12" WITH COMPACT NO. 53 STONE.
4. ALL ABOVE GROUND ELECTRICAL COMPONENTS, CONDUIT AND WIRING, ANTENNA TOWER, AND SUPPORT STRUCTURES SHALL BE DEENERGIZED, DISCONNECTED AND REMOVED.
5. FIELD LOCATE THE FORCE MAIN. INSTALL END CAP ON FORCE MAIN TO BE ABANDONED IN PLACE.
6. INSTALL END CAP AND ABANDON THE GRAVITY SEWER IN PLACE.
7. REMOVE FORCE MAIN PIPE AND SUPPORTS FROM MANHOLE AND INSTALL GROUT PLUG AT THE OPENING. GROUT ANY VOIDS LEFT IN MANHOLE WALLS FROM PIPING REMOVAL.
8. REMOVE EXISTING CONCRETE PARKING LOT AS REQUIRED TO CONSTRUCT NEW MANHOLE. REPLACE CONCRETE PARKING LOT TO MATCH EXISTING ELEVATION AND DEPTH. PATCH WIDTH SHALL BE MINIMUM OF ½ OF SLAB OR FULL SLAB IF CONCRETE REMOVAL IS GREATER THAN ½ OF EXISTING SLAB.

GREELEY AND HANSEN
6640 INTECH BOULEVARD, SUITE 180
INDIANAPOLIS, INDIANA 46278

DESIGNED	KRN	APPROVED
DRAWN	RKY	SEAL AFFIXED JUNE 21, 2011
CHECKED	JMT	

PAUL J. VOGEL REGISTERED No. PE 10200267 STATE OF INDIANA PROFESSIONAL ENGINEER

NO.	DATE	APPD	REVISION

SCALE
20 0 20 40 FT 1"=20'
40 0 40 80 FT 1"=40'
5 0 5 10 FT 1"=5'

CITY OF WEST LAFAYETTE, INDIANA

WESTERN SANITARY SEWER INTERCEPTOR
DIVISION V

CIVIL
BLACKBIRD POND
LIFT STATION DEMOLITION PLAN
& SEWER IMPROVEMENTS

FILE NAME	079140G16.DWG
DWG	G16
SHEET	16 OF 24
DATE	JUNE 2011 REV 0

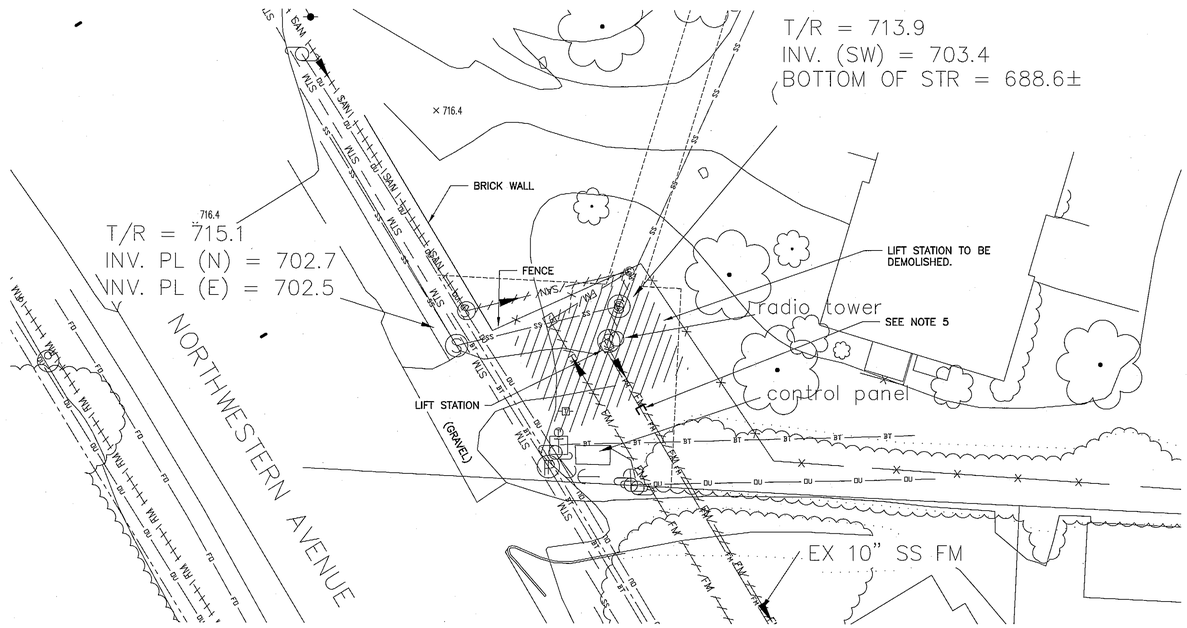

PLAN – DEMOLITION

SCALE: 1" = 20'

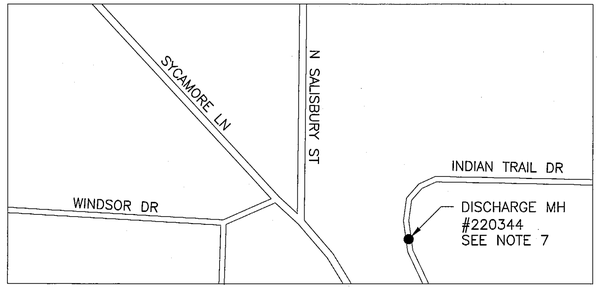

PLAN – CAMELBACK
LIFT STATION DISCHARGE

SCALE: NOT TO SCALE

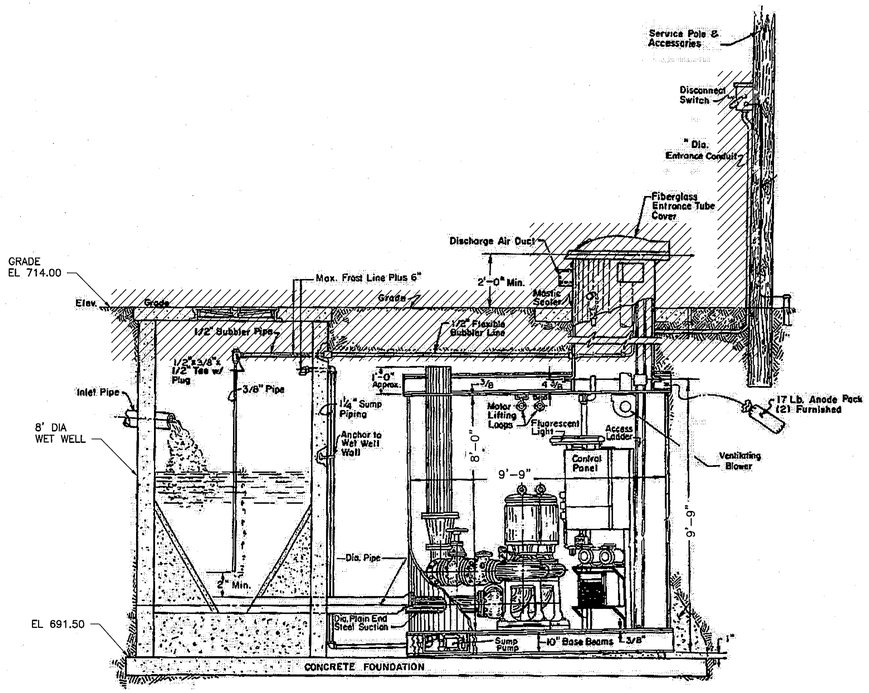

SECTION – DEMOLITION

NOT TO SCALE

LIFT STATION DEMOLITION NOTES:

1. CROSS HATCH INDICATES REMOVAL OF STRUCTURES, PIPING AND EQUIPMENT.
2. CONTRACTOR SHALL INSPECT THE SITE PRIOR TO BIDDING PROJECT TO SEE EXTENT OF THE DEMOLITION WORK INVOLVED AND TO INCLUDE THE NECESSARY WORK IN BID.
3. DEMOLISH EXISTING LIFT STATION TO 24" BELOW GRADE. CORE DRILL FOUR 6" DIA HOLES IN BOTTOM OF WET WELL FOR DRAINAGE. FILL LIFT STATION AND WET WELL WITH SAND TO 12" BELOW GRADE. BACKFILL TOP 12" WITH COMPACT NO. 53 STONE.
4. ALL ABOVE GROUND ELECTRICAL COMPONENTS, CONDUIT AND WIRING, ANTENNA TOWER, AND SUPPORT STRUCTURES SHALL BE DEENERGIZED, DISCONNECTED AND REMOVED.
5. FIELD LOCATE THE FORCE MAIN. INSTALL END CAP ON FORCE MAIN TO BE ABANDONED IN PLACE.
6. INSTALL END CAP AND ABANDON GRAVITY SEWER INPLACE.
7. REMOVE FORCE MAIN PIPE FROM MANHOLE WALL AND INSTALL GROUT PLUG AT THE OPENING. GROUT ANY VOIDS LEFT IN MANHOLE WALLS FROM PIPING REMOVAL.

GREELEY AND HANSEN
6640 INTECH BOULEVARD, SUITE 180
INDIANAPOLIS, INDIANA 46278

DESIGNED	KRN
DRAWN	RKY
CHECKED	JMT

APPROVED
SEAL AFFIXED
JUNE 21, 2011

PAUL J. VOGEL REGISTERED No. PE 10200267 STATE OF INDIANA PROFESSIONAL ENGINEER

NO.	DATE	APPD	REVISION

SCALE 20 0 20 40 FT 1"=20'

CITY OF WEST LAFAYETTE, INDIANA

WESTERN SANITARY SEWER INTERCEPTOR
DIVISION V

CIVIL

CAMELBACK
LIFT STATION DEMOLITION PLAN

FILE NAME	079140G17.DWG
DWG	G17
SHEET	17 OF 24
DATE	JUNE 2011
REV	0

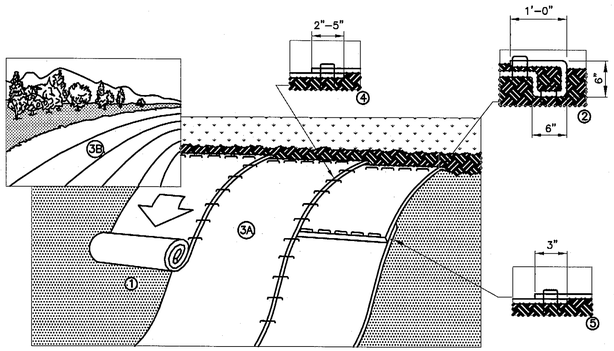

NOTES:

1. EROSION CONTROL MATS ARE INTENDED TO PREVENT EROSION AND HOLD SEED AND MULCH IN PLACE ON STEEP SLOPES AND IN CHANNELS SO THAT VEGETATION CAN BECOME WELL ESTABLISHED.
2. EROSION CONTROL MATS SHOULD BE USED:
   A.) FOR PERMANENT STABILIZATION OF SLOPES 10 PERCENT OR GREATER AND WITH MORE THAN 10 FEET OF VERTICAL RELIEF.
   B.) IN CONJUNCTION WITH SEED FOR FINAL STABILIZATION OF A SLOPE.
3. PROVIDE EROSION CONTROL MATS WHERE SHOWN AND AS REQUIRED FOR SLOPE PROTECTION AND RESTORATION.
4. EROSION CONTROL MATS SHALL BE AS WIDE AS NECESSARY TO PROTECT THE AREA DISTURBED BY CONSTRUCTION.
5. NO DIRECT PAYMENT SHALL BE MADE FOR THIS WORK BUT THE COST THERE OF SHALL BE INCLUDED IN THE COSTS OF THE OTHER ITEMS OF THE CONTRACT.

INSTALLATION GUIDE

1. PREPARE SOIL BEFORE INSTALLING BLANKETS, INCLUDING ANY NECESSARY APPLICATION OF LIME, FERTILIZER, AND SEED.
   NOTE: WHEN USING CELL–O–SEED DO NOT SEED PREPARED AREA. CELL–O–SEED MUST BE INSTALLED PAPER SIDE DOWN.
2. BEGIN AT THE TOP OF THE SLOPE BY ANCHORING THE BLANKET IN A 6" DEEP X 6" WIDE TRENCH WITH APPROXIMATELY 12" OF BLANKET EXTENDED BEYOND THE UP–SLOPE PORTION OF THE TRENCH. ANCHOR THE BLANKET WITH A ROW OF STAPLES/STAKES APPROXIMATELY 12" APART IN THE BOTTOM OF THE TRENCH. BACKFILL AND COMPACT THE TRENCH AFTER STAPLING. APPLY SEED TO COMPACTED SOIL AND FOLD REMAINING 12" PORTION OF BLANKET BACK OVER SEED AND COMPACTED SOIL. SECURE BLANKET OVER COMPACTED SOIL WITH A ROW OF STAPLES/STAKES SPACED APPROXIMATELY 12" APART ACROSS THE WIDTH OF THE BLANKET.
3. ROLL THE BLANKETS (A.) DOWN OR (B.) HORIZONTALLY ACROSS THE SLOPE. BLANKETS WILL UNROLL WITH APPROPRIATE SIDE AGAINST THE SOIL SURFACE. ALL BLANKETS MUST BE SECURELY FASTENED TO SOIL SURFACE BY PLACING STAPLES/STAKES IN APPROPRIATE LOCATIONS AS SHOWN IN THE STAPLE PATTERN GUIDE.
4. THE EDGES OF PARALLEL BLANKETS MUST BE STAPLED WITH APPROXIMATELY 2"–5" OVERLAP DEPENDING ON BLANKET TYPE. TO ENSURE PROPER SEAM ALIGNMENT, PLACE THE EDGE OF THE OVERLAPPING BLANKET (BLANKET BEING INSTALLED ON TOP) EVEN WITH THE COLORED SEAM STITCH ON THE PREVIOUSLY INSTALLED BLANKET.
5. CONSECUTIVE BLANKETS SPLICED DOWN THE SLOPE MUST BE PLACED END OVER END (SHINGLE STYLE) WITH AN APPROXIMATE 3" OVERLAP. STAPLE THROUGH OVERLAPPED AREA, APPROXIMATELY 12" APART ACROSS ENTIRE BLANKET WIDTH.
   NOTE: *IN LOOSE SOIL CONDITIONS, THE USE OF STAPLE OR STAKE LENGTHS GREATER THAN 6" MAY BE NECESSARY TO PROPERLY SECURE THE BLANKETS.

DETAIL 1–EROSION CONTROL MAT/G03, G08

SCALE: NOT TO SCALE

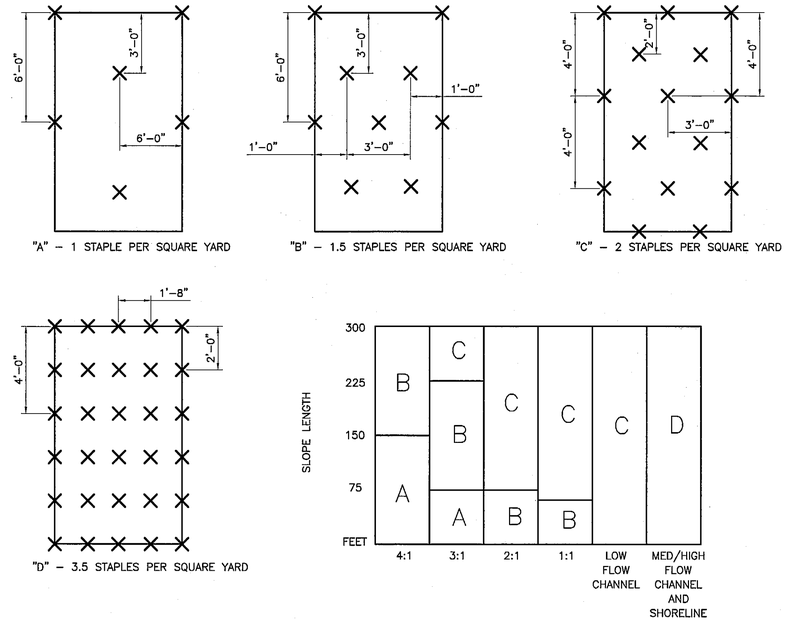

DETAIL 2–EROSION CONTROL MAT – STAPLE GUIDE/G03, G08

SCALE: NOT TO SCALE

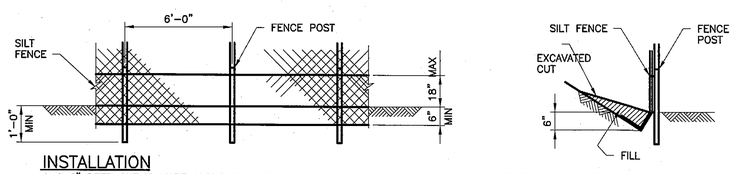

INSTALLATION

1. A 6" DEEP CUT IS MADE ALONG THE UPHILL SIDE OF THE PROPOSED SILT FENCE.
2. 2" HARDWOOD OR STEEL FENCE POST ARE INSTALLED 6' APART (OR 8' IF SILT FENCE HAS WIRE BACKING.
3. THE SILT FENCE IS UNROLLED ALONG THE FENCE LINE.
4. ONE END OF THE BUILT–IN ATTACHMENT CORD WHICH RUNS THROUGH THE FULL LENGTH OF THE FENCE IS WRAPPED AROUND AND SECURED TO THE FIRST FENCE POST.
5. THE FENCE IS PULLED TO THE NEXT POST AND A SMALL SLICE IS MADE IN THE HEM ABOVE THE CORD. THE CORD IS PARTIALLY PULLED OUT, PULLED TAUT AND WRAPPED TWICE AROUND THE POST.
6. THE PROCESS IS REPEATED UNTIL THE LAST POST IS REACHED, AT WHICH POINT THE CORD IS SECURED.
7. THE LOWER 8" OF THE FENCE IS LAYED UPHILL IN THE CUT AND BACKFILLED WITH SOIL.

NOTE:

1. NO DIRECT PAYMENT SHALL BE MADE FOR THIS WORK BUT THE COST THERE OF SHALL BE INCLUDED IN THE COSTS OF THE OTHER ITEMS OF THE CONTRACT.

SILT FENCE DETAIL

SCALE: NOT TO SCALE

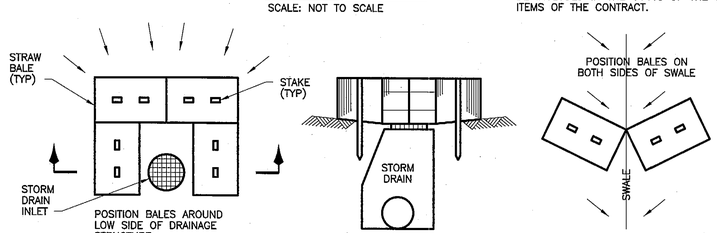

DRAINAGE STRUCTURE PLAN — SECTION — DRAINAGE SWALE PLAN

DETAIL 3–STORM INLET PROTECTION DETAILS/G03, G08

SCALE: NOT TO SCALE

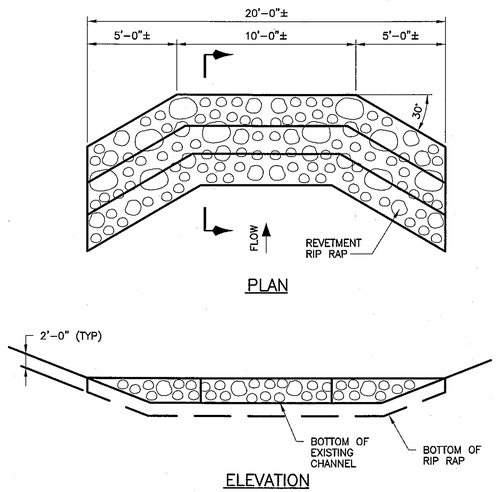

NOTES:

1. INSTALL AND MAINTAIN SEDIMENT TRAPS WHERE SHOWN AND AS REQUIRED DOWNSTREAM OF CONSTRUCTION AREA BEFORE COMMENCING WITH ANY CONSTRUCTION ACTIVITES WHICH CAUSE SILTATION OF CREEKS AND DITCHES.
2. CONTRACTOR SHALL BE RESPONSIBLE FOR BYPASSING ALL WATER FROM UPSTREAM OF CREEK/DITCH CROSSING TO DOWNSTREAM OF SEDIMENT TRAP.
3. AFTER COMPLETION OF ALL CONSTRUCTION ACTIVITIES WHICH CAUSE SILTATION, ALL SEDIMENTS WHICH HAVE COLLECTED ON THE UPSTREAM SIDE OF THE SEDIMENT TRAP SHALL BE REMOVED, AND DISPOSED OF AT AN OFF–SITE LOCATION. THE SEDIMENT TRAP SHALL THEN BE RESHAPED TO THE ORIGINAL CHANNEL DIMENSIONS. WHEN APPROPRIATE THE EXCESS REVETMENT RIP RAP SHALL BE RANDOMLY PLACED IN THE CHANNEL BOTTOM BETWEEN THE CHANNEL CLEARING LIMITS. OTHERWISE REMOVE AND DISPOSE OF EXCESS RIP RAP AT AN OFF–SITE LOCATION.
4. NO DIRECT PAYMENT SHALL BE MADE FOR THIS WORK BUT THE COST THERE OF SHALL BE INCLUDED IN THE COSTS OF THE OTHER ITEMS OF THE CONTRACT.

DETAIL 4–SEDIMENT TRAP/G03, G08

SCALE: NOT TO SCALE

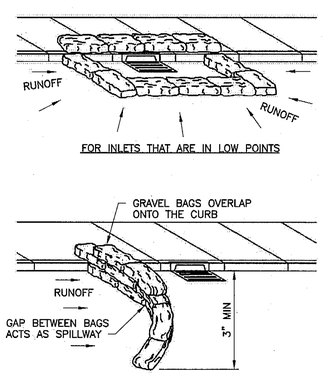

DETAIL 5–DRAINAGE DETAILS/G03, G08

SCALE: NOT TO SCALE

GREELEY AND HANSEN
6640 INTECH BOULEVARD, SUITE 180
INDIANAPOLIS, INDIANA 46278

DESIGNED	KRN	APPROVED
DRAWN	LG	SEAL AFFIXED JUNE 21, 2011
CHECKED	JMT	

PAUL J. VOGEL REGISTERED No. PE 10200267 STATE OF INDIANA PROFESSIONAL ENGINEER

NO.	DATE	APPD	REVISION

SCALE: NOT TO SCALE

CITY OF WEST LAFAYETTE, INDIANA

WESTERN SANITARY SEWER INTERCEPTOR DIVISION V

CIVIL

EROSION & SEDIMENT CONTROL DETAILS

FILE NAME 079140G18.DWG
DWG G18
SHEET 18 OF 24
DATE JUNE 2011 REV 0

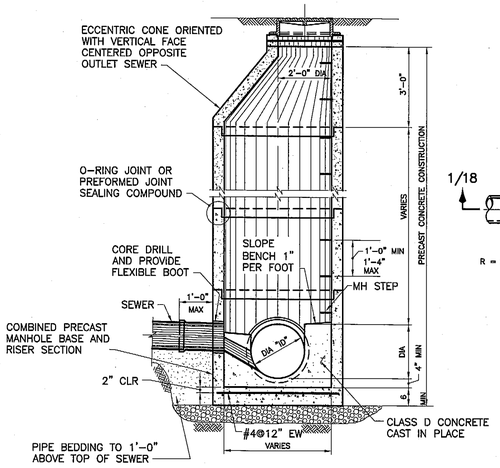

SECTION 1/G18

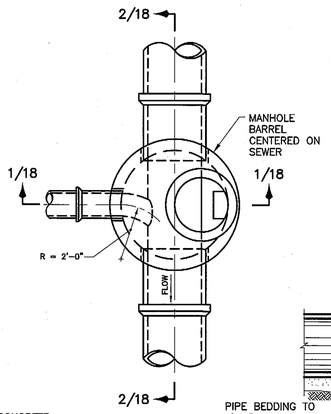

PLAN

STANDARD MANHOLE
SCALE: 3/8" = 1'-0"

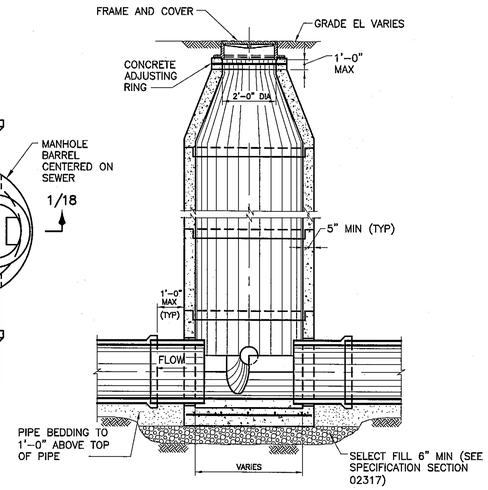

SECTION 2/18

NOTES:

1. SEE SPECIFICATION SECTION 02509 FOR REQUIREMENTS.
2. MANHOLES FOR PIPE 18" AND SMALLER TO BE 48". MANHOLES FOR PIPE 24" AND LARGER TO BE 60", UNLESS NOTED OTHERWISE.

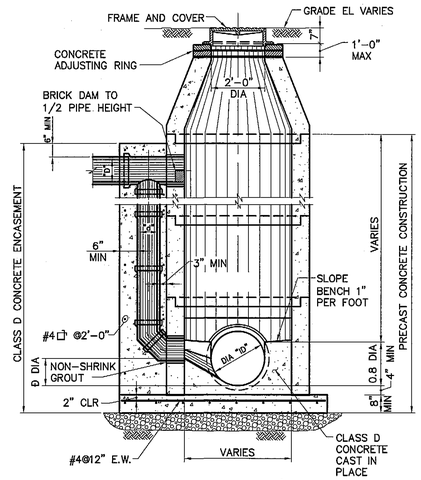

SECTION 3/18

SCHEDULE FOR DROP MANHOLES	
INLET PIPE DIAMETER "D"	DROP PIPE DIAMETER "d"
8"	8"
12"	12"
15"	12"
18"	15"
24"	18"

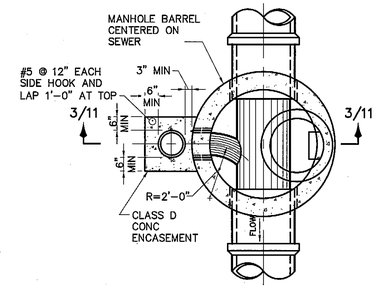

PARTIAL PLAN

STANDARD DROP MANHOLE
SCALE: 3/8" = 1'-0"

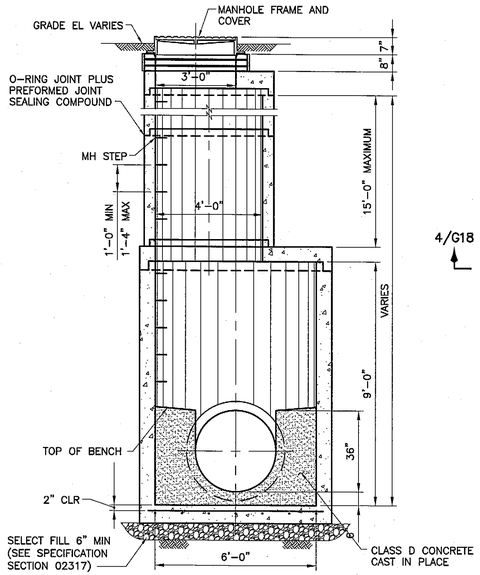

SECTION 4/G18

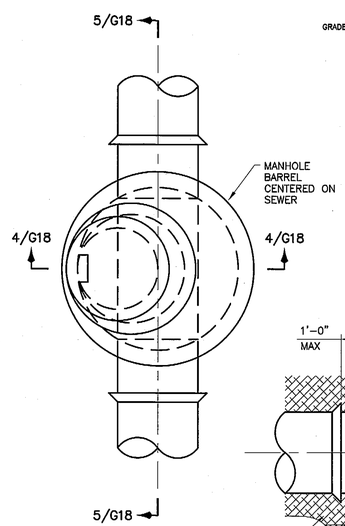

PLAN

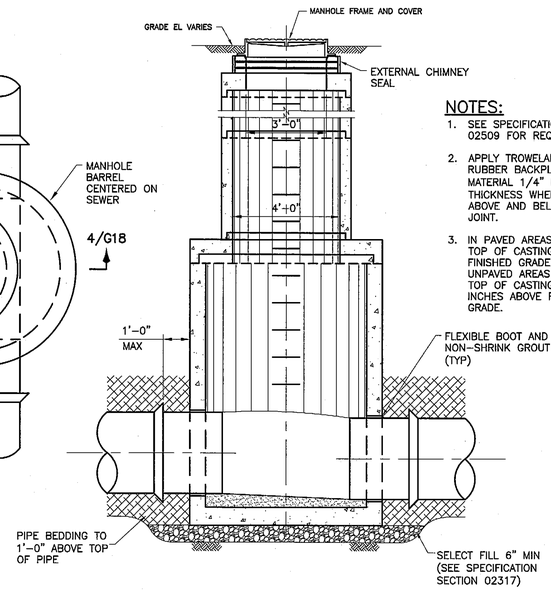

SECTION 5/G18

NOTES:

1. SEE SPECIFICATION SECTION 02509 FOR REQUIREMENTS.
2. APPLY TROWELABLE BUTYL RUBBER BACKPLASTER MATERIAL 1/4" MINIMUM THICKNESS WHEN DRY 6" ABOVE AND BELOW EACH JOINT.
3. IN PAVED AREAS MATCH TOP OF CASTING WITH FINISHED GRADE. IN UNPAVED AREAS EXTEND TOP OF CASTING THREE INCHES ABOVE FINISHED GRADE.

SPECIAL MANHOLE
SCALE: 3/8" = 1'-0"

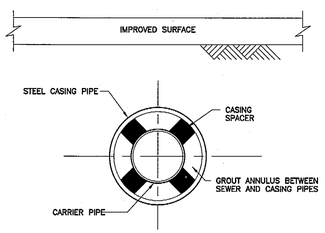

CARRIER PIPE SIZE	CASING SIZE
12"	24"
24	42"

NOTES:

1. SEE SPECIFICATION SECTION 02445 FOR REQUIREMENTS
2. SEAL ANNULUS BETWEEN CARRIER AND CASING PIPES AT BOTH ENDS WITH 8" THICK BRICK BULKHEAD.

TYPICAL CASING SECTION
SCALE: NOT TO SCALE

GREELEY AND HANSEN
6640 INTECH BOULEVARD, SUITE 180
INDIANAPOLIS, INDIANA 46278

DESIGNED	KRN	APPROVED
DRAWN	LG	SEAL AFFIXED JUNE 21, 2011
CHECKED	JMT	

PAUL J. VOGEL REGISTERED No. PE 10200267 STATE OF INDIANA PROFESSIONAL ENGINEER

NO.	DATE	APPD	REVISION

SCALE 1 0 1 2 3 4 5 6 7 FT 3/8"=1'-0"

CITY OF WEST LAFAYETTE, INDIANA

WESTERN SANITARY SEWER INTERCEPTOR DIVISION V

CIVIL

MISCELLANEOUS DETAILS

FILE NAME	079140G19.DWG
DWG	G19
SHEET	19 OF 24
DATE	JUNE 2011 REV 0

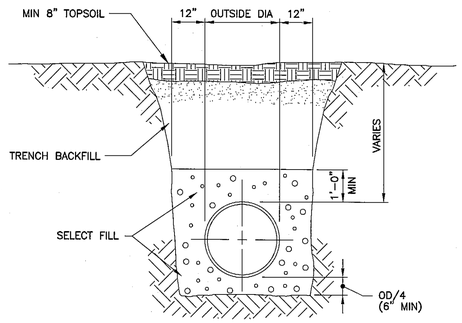

NOTES:

1. EXTEND PIPE BEDDING TO UNDISTURBED EARTH AT THE SIDES AND BOTTOM OF THE TRENCH.
2. SEE SPECIFICATION 02317 FOR MATERIAL REQUIREMENTS, PLACEMENT AND COMPACTION OF PIPE BEDDING AND TRENCH BACKFILL.
3. TRENCH OUTLINES DO NOT INDICATE ACTUAL TRENCH EXCAVATION SHAPE OF SOIL CONDITIONS. EMBEDMENT MATERIAL SHALL EXTEND THE FULL WIDTH OF THE ACTUAL TRENCH EXCAVATION.

TRENCH DETAIL UNIMPROVED AREAS

NOT TO SCALE

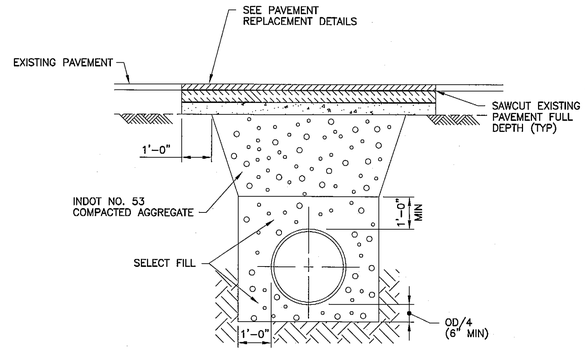

NOTES:

1. EXTEND PIPE BEDDING TO UNDISTURBED EARTH AT THE SIDES AND BOTTOM OF THE TRENCH.
2. SEE SPECIFICATION 02317 FOR MATERIAL REQUIREMENTS, PLACEMENT AND COMPACTION OF PIPE BEDDING AND TRENCH BACKFILL.
3. TRENCH BACKFILL WITHIN A HORIZONTAL DISTANCE OF 5 FEET AND BENEATH ALL ROADWAYS, DRIVEWAYS, PARKING AREAS AND HIGHWAY SHOULDERS SHALL BE FULL DEPTH INDOT NO. 53 STONE.
4. TRENCH OUTLINES DO NOT INDICATE ACTUAL TRENCH EXCAVATION SHAPE OF SOIL CONDITIONS. EMBEDMENT MATERIAL SHALL EXTEND THE FULL WIDTH OF THE ACTUAL TRENCH EXCAVATION.

TRENCH DETAIL UNDER IMPROVED AREAS

NOT TO SCALE

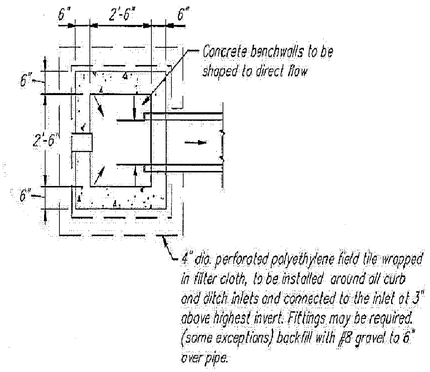

PLAN VIEW

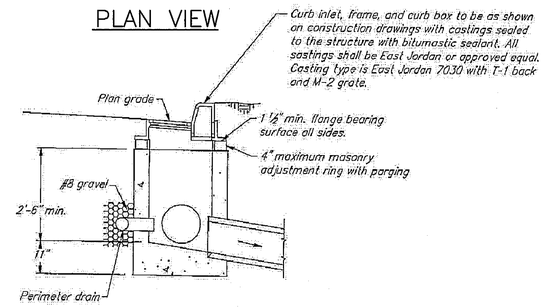

SECTION VIEW
CURB INLET – PRECAST TYPE

SCALE: 1/2" = 1'-0"

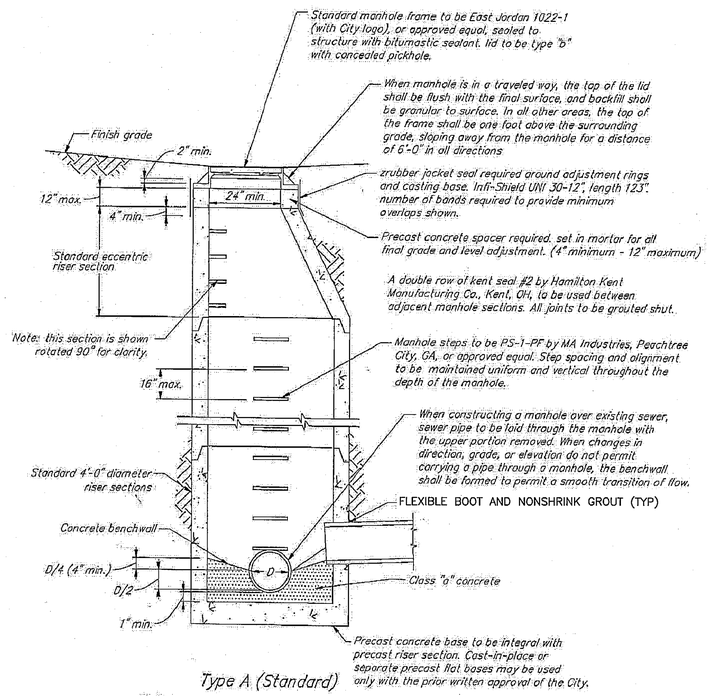

Notes:

Precast concrete manholes shall conform to ASTM C-478

STORM SEWER MANHOLE – INLET

SCALE: NOT TO SCALE

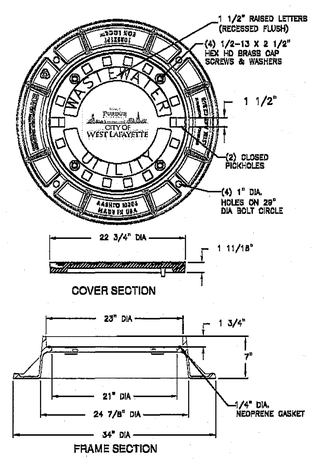

MANHOLE FRAME AND COVER

SCALE: 1" = 1'-0"

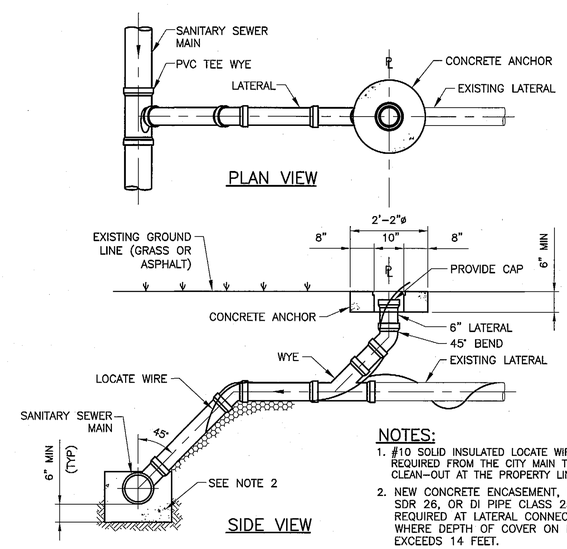

NOTES:

1. #10 SOLID INSULATED LOCATE WIRE REQUIRED FROM THE CITY MAIN TO THE CLEAN-OUT AT THE PROPERTY LINE.
2. NEW CONCRETE ENCASEMENT, PVC SDR 26, OR DI PIPE CLASS 250 REQUIRED AT LATERAL CONNECTION WHERE DEPTH OF COVER ON MAIN EXCEEDS 14 FEET.

LATERAL CONNECTION DETAIL

SCALE: 1/2" = 1'-0"

GREELEY AND HANSEN 6640 INTECH BOULEVARD, SUITE 180 INDIANAPOLIS, INDIANA 46278	DESIGNED KRN DRAWN LG CHECKED JMT	APPROVED SEAL AFFIXED JUNE 21, 2011	PAUL J. VOGEL REGISTERED No. PE 10200267 STATE OF INDIANA PROFESSIONAL ENGINEER	NO.	DATE	APPD	REVISION	SCALE 1 0 1 2 3 4 5 FT 1/2"=1'-0"	CITY OF WEST LAFAYETTE, INDIANA WESTERN SANITARY SEWER INTERCEPTOR DIVISION V	GENERAL MISCELLANEOUS DETAILS	FILE NAME 079140G20.DWG DWG G20 SHEET 20 OF 24 DATE JUNE 2011 REV 0

SANITARY SEWER

STRUCTURE TABLE

NUMBER	RIM ELEV	INVERT IN	INVERT OUT	DIAMETER	TYPE
SAN-01	708.51	692.50 24"(N)	691.91 24"(S)	72"	STANDARD
SAN-02	712.63	693.87 24"(NW)	692.86 24"(S)	60"	STANDARD
SAN-03	714.61	697.38 12"(NE) 698.90 24"(NW)	695.18 24"(SE)	60"	DROP
SAN-04	717.15	700.82 24"(NW)	700.62 24"(SE)	48"	STANDARD
SAN-05	718.86	702.75 24"(N) 709.23 15"(NW)	702.55 24"(SE)	60"	DROP
SAN-06	718.90	703.60 18"(N)	703.20 24"(S)	60"	DROP
SAN-07	721.50	704.40 18"(NE)	704.20 18"(S)	48"	STANDARD
SAN-08	721.50	704.89 18"(N) 706.82 8"(E)	704.69 18"(SW)	48"	STANDARD
SAN-09	721.06	705.44 18"(N)	705.24 18"(S)	48"	STANDARD
SAN-10	722.49	706.23 18"(N)	706.03 18"(S)	48"	DROP
SAN-11	724.32	707.77 18"(N)	707.57 18"(S)	48"	STANDARD
SAN-12	722.35	709.10 18"(N)	708.90 18"(S)	48"	STANDARD
SAN-13	719.27	711.10 6"(E) 711.27 8"(W)	709.86 18"(S)	60"	SPECIAL
SAN-14	718.90	710.70 15"(W)	710.50 15"(SE)	48"	STANDARD
SAN-15	716.79	711.10 10"FM(N)	711.00 15"(E)	48"	SPECIAL
SAN-16	721.50	713.04 8"(S) 707.08 8"(E)	707.08 8"(N)	48"	DROP
SAN-17	720.00	714.96 8"(S)	713.30 8"(N)	48"	STANDARD
SAN-18	720.00	715.80 8"(S)	715.13 8"(N)	48"	STANDARD
SAN-19	713.99	697.95 12"(E)	697.85 12"(SW)	48"	STANDARD
SAN-20	713.99		698.00 12"(W)	48"	STANDARD
EXSAN-A	712.17	693.32 12"(E)		72"	STANDARD
EXSAN-B	673.95	658.85 24"(NE)		60"	STANDARD
SAN-21	711.88	693.62 12"(E) 701.30 12"(NW)	693.52 12"(W)	48"	DROP
SAN-22	712.92	695.12 12"(E)	695.02 12"(W)	48"	STANDARD
SAN-23	715.20	696.62 12"(E)	696.52 12"(W)	48"	STANDARD
SAN-24	715.82	697.64 12"(E) 697.42 12"(S)	697.32 12"(W)	48"	STANDARD
SAN-25	715.79	697.75 12"(N)	697.67 12"(W)	48"	STANDARD
SAN-26	716.01	697.70 12"(E)	697.60 12"(N)	48"	STANDARD
SAN-27	716.04	697.90 12"(S)	697.80 12"(W)	48"	STANDARD
SAN-28	683.12	677.92 12"(W) 654.54 30"(N)	654.04 36"(S)	120"	SPECIAL
SAN-29	674.61	660.00 8"(NW)	659.01 24"(SW)	60"	STANDARD

PIPE TABLE

UPSTREAM STRUCTURE	DOWNSTREAM STRUCTURE	PIPE SIZE	MATERIAL/CLASS
SAN-02	SAN-01	24"	PVC SDR26
SAN-03	SAN-02	24"	PVC SDR26
SAN-04	SAN-03	24"	PVC SDR26
SAN-05	SAN-04	24"	PVC SDR26
SAN-06	SAN-05	24"	PVC SDR26
SAN-07	SAN-06	18"	PVC SDR26
SAN-08	SAN-07	18"	PVC SDR26
SAN-09	SAN-08	18"	PVC SDR26
SAN-10	SAN-09	18"	PVC SDR26
SAN-11	SAN-10	18"	PVC SDR26
SAN-12	SAN-11	18"	PVC SDR26
SAN-13	SAN-12	18"	PVC SDR26
SAN-14	SAN-05	15"	PVC SDR35
SAN-15	SAN-14	15"	PVC SDR35
SAN-16	SAN-08	8"	PVC SDR26
SAN-17	SAN-16	8"	PVC SDR35
SAN-18	SAN-17	8"	PVC SDR35
SAN-19	SAN-03	12"	PVC SDR26
SAN-20	SAN-19	12"	PVC SDR26
SAN-21	EXSAN-A	12"	PVC SDR26
SAN-22	SAN-21	12"	PVC SDR26
SAN-23	SAN-22	12"	PVC SDR26
SAN-24	SAN-23	12"	PVC SDR26
SAN-25	SAN-24	12"	PVC SDR26
SAN-26	SAN-24	12"	PVC SDR26
SAN-27	SAN-26	12"	PVC SDR26
EX-FM	SAN-28	12"	PVC SDR21
SAN-29	EXSAN-B	24"	PVC SDR26

STORM SEWER

STRUCTURE TABLE

NUMBER	RIM ELEV	INVERT IN	INVERT OUT	DIAMETER	TYPE
STM-01	711.90	706.97 15"(E) 706.97 12"(N)	706.87 15"(SW)	48"	MANHOLE W/INLET
STM-02	711.81		707.10 12"(S)	–	CURB INLET
STM-03	711.94	707.13 15"(E)	707.03 15"(W)	48"	STANDARD MANHOLE
STM-04	713.62	708.86 12"(SE) 708.86 12"(NE)	708.76 15"(W)	48"	STANDARD MANHOLE
STM-05	713.67		708.92 12"(NW)	–	CURB INLET
STM-06	713.67		708.97 12"(SW)	–	CURB INLET
STM-07	715.74	709.40 15"(E)	709.35 15"(N)	48"	STANDARD MANHOLE
STM-08	715.68	709.47 15"(S)	709.47 15"(W)	48"	MANHOLE W/INLET
STM-09	715.71	709.64 15"(S)	709.54 15"(N)	48"	STANDARD MANHOLE
STM-10	715.72	709.84 12"(W)	709.74 15"(N)	48"	MANHOLE W/INLET
STM-11	716.25	710.12 12"(N)	710.02 12"(E)	48"	STANDARD MANHOLE
STM-12	715.92		710.16 12"(S)	–	CURB INLET

PIPE TABLE

UPSTREAM STRUCTURE	DOWNSTREAM STRUCTURE	PIPE SIZE	MATERIAL/CLASS
STM-01	OUTFALL	15"	RCP CLASS III
STM-02	STM-01	12"	RCP CLASS III
STM-03	STM-01	15"	RCP CLASS III
STM-04	STM-03	15"	RCP CLASS III
STM-05	STM-04	12"	RCP CLASS III
STM-06	STM-04	12"	RCP CLASS III
STM-08	STM-07	15"	RCP CLASS III
STM-09	STM-08	15"	RCP CLASS III
STM-10	STM-09	15"	RCP CLASS III
STM-11	STM-10	12"	RCP CLASS III
STM-12	STM-11	12"	RCP CLASS III

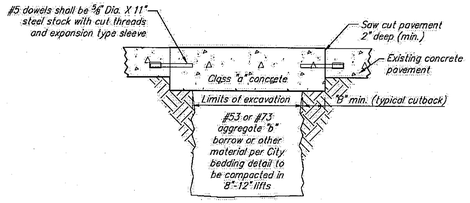

Concrete Pavement Repair

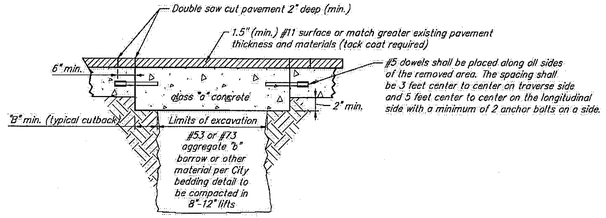

Asphalt Over Concrete Or Alternative Asphalt Pavement Repair

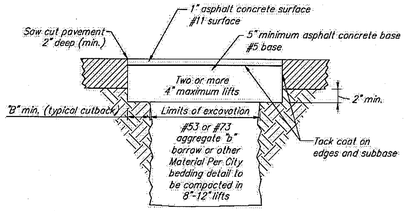

Asphalt Pavement Repair

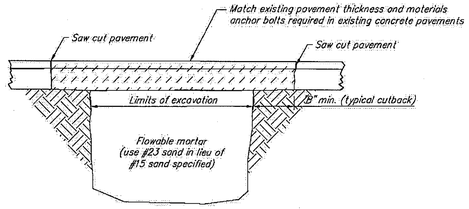

Pavement Repair With Flowable Mortar Backfill

(Flowable mortar shall not be used when temperatures are below 40°F)

** Use of flowable mortar requires prior approval from the City Engineer's office

Cutback Table	
Cut- Back "B"	Trench Width
6"	3'-0" or less
9"	3'-1" to 5'-0"
12"	5'-1" or greater

PERMANENT PAVEMENT RESTORATION

Not To Scale

Notes:

All pavement restoration materials to be per INDOT "Standard Specifications" most recent edition.

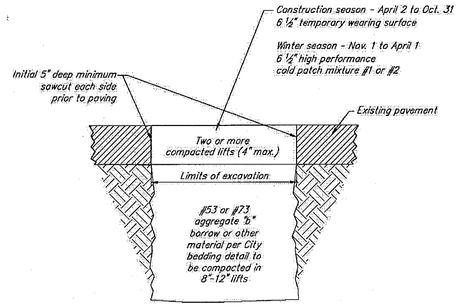

TEMPORARY ASPHALT REPAIR

Not To Scale

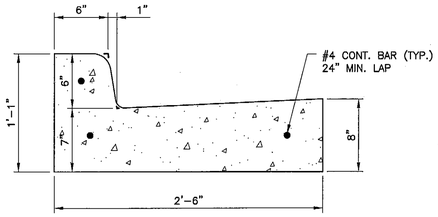

COMBINED CONCRETE CURB AND GUTTER

SCALE: NOT TO SCALE

Pavement Restoration Notes:

Permanent pavement restoration:

1. Permanent restoration shall commence immediately upon completion of utility work and be complete within 10 working days unless the City Engineer's office grants a longer period. Request for extension shall be in written form and accompanied with a repair schedule. Inventory of existing temporary restorations, and statement indicating the reason(s) for the extension.
2. Existing pavement saw cuts shall be in straight lines and are perpendicular to the curb (where possible). Edges of broken pavement shall be squared off to provide neat edge for paving.
3. Asphalt shall be placed using professional means to establish a hard, smooth, even graded surface. Compaction shall be done thoroughly and uniformly by a machine roller. Areas too small for machine rolling shall be compacted by hand with mechanical compaction equipment upon prior approval of the City. All courses shall be initially rolled with the roller traveling parallel to the centerline of the pavement beginning at each edge and working toward the center. All rolling and tamping operations shall be completed prior to asphalt cooling to below 180°F.
4. Prior to tack coating subbase and edges, the existing surface shall be free of irregularities to provide a reasonably smooth and uniform surface to receive treatment. The edges of existing pavement shall be cleaned to permit adhesion. Tack coat shall not be applied to wet surfaces or when the air temperature is below 45°F. Tack coat may be rolled, brushed or mopped. All excess tack coat shall be squeegeed from the surface.
5. All pavement restoration materials to be per INDOT "standard specifications", most recent edition.

Temporary pavement repair:

1. Existing pavement initial saw cut to be 5" minimum depth to obtain straight lines perpendicular from the curb edge and neat edge for paving. Edges of broken pavement shall be squared off and trimmed to neat straight lines.
2. Temporary pavement material is to be 6 1/2" thick hot mix asphalt. asphalt cold patch, bag asphalt and crushed stone are unacceptable for use. The use of steel street plates must be requested in written form and accompanied with a repair schedule, inventory of existing temporary restorations, and statement indicating the reason(s) for use of plates.
3. During winter season when the permanent patch cannot be completed within 10 working days (November 1 thru April 14), if hot mix asphalt is not available, use INDOT approved "high performance cold patch" or equal INDOT approved material.

High performance cold patch mixture #1 (upm), is for use in wet and cold conditions and workable at temperatures as low as -15°F.

High performance cold patch mixture #2 (cm300), is for use in wet and cold conditions and workable at temperatures as low as 32°F.

4. All materials are to be compacted to form a firm and smooth transition between old and new surface grade. Do not apply hot mix asphalt on a wet surface.
5. Upon completion of backfilling, temporary pavement on streets shall be placed by the end of the work day.
6. Temporary street restoration is intended to be an interim measure until conditions allow for permanent restoration of the street. The City realizes that at times, temporary restoration is necessary, such as, during the winter season when the asphalt plants are closed and when freezing temperatures make permanent restoration not feasible or when permit work precedes City street reconstruction or rehabilitation permit holders are to minimize the use of temporary restorations when possible. Any work undertaken before the fall asphalt plant closings must be permanently restored prior to the asphalt plant closings. Only work undertaken on or after December 1 (given that the asphalt plants have closed) may be carried over to permanent restoration in the following spring season. All temporary restoration placed during the winter season must be permanently restored within four (4) weeks of spring asphalt plant openings, but no later than may 15th. The City Engineer's office may grant extensions beyond May 15th for permanent restorations when requested in writing and accompanied with a repair schedule, Inventory of existing temporary restorations, and a statement indicating the reason(s) for the extension. All temporary restoration must be maintained by the permit holder until permanent restoration has been made.

Special surface streets:

1. Any special surfaces shall be restored in-kind. For example: brick surface streets require all pavement cuts to be restored with brick. Cobblestone surface streets must be restored with cobblestone. Permit holder shall salvage as much of the existing brick or cobblestone as possible for reuse in the restoration and shall supply any remaining material required for the restoration.

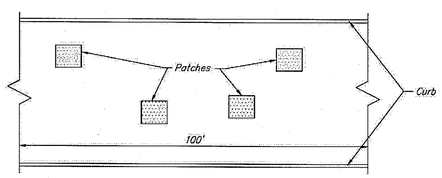

Multiple cuts shall be defined as any city street or alley, asphalt or concrete that have the following conditions:

1. Four (4) or more patches per 100 lineal feet of roadway by an individual utility per project, and
2. Area cut is greater than 64 sf in 100 lineal feet of roadway by an individual utility per project.

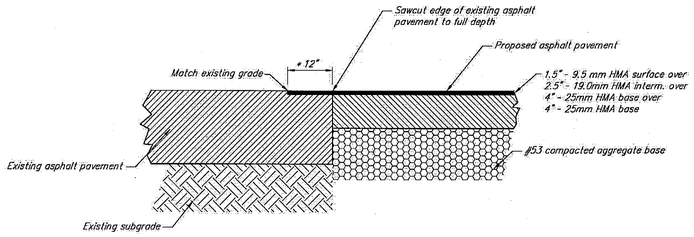

* Mill surface 1" deep for 12" from sawcut edge. Tack coat all exposed surfaces, and overlay with 1.5" of asphaltic surface. Continuous with proposed pavement surface.

LAP JOINT DETAIL

Not To Scale

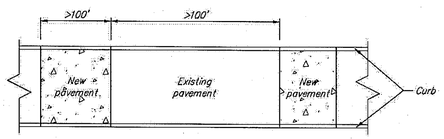

Multiple cuts to be restored as follows:

New pavement areas shall not have gaps of less than 100 feet. Minimum length of new pavement shall be 100 feet.

METHOD FOR REPLACING MULTIPLE OR LARGE CUTS

Not To Scale

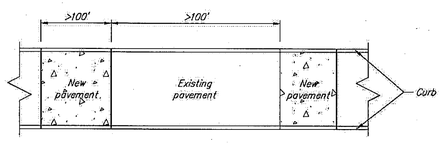

Multiple cuts to be restored as follows:

New pavement areas shall not have gaps of less than 100 feet. Minimum length of new pavement shall be 100 feet.

METHOD FOR REPLACING MULTIPLE OR LARGE CUTS

Not To Scale

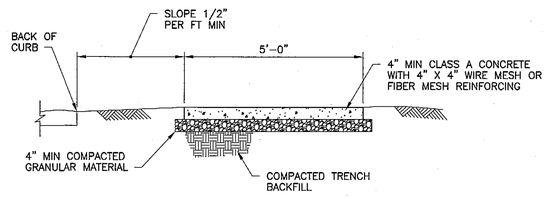

NOTES:

1. PROVIDE CONTRACTION JOINTS AT INTERVALS OF 5 FEET FOR NEW WALKS.
2. PROVIDE 1/2" THICK EXPANSION JOINT AT JUNCTION OF STRUCTURES, CURBS AND AT MINIMUM 25 FOOT INTERVALS.

SIDEWALK REPLACEMENT DETAIL

SCALE: NOT TO SCALE

FILE: 079140G22 1:1 06/20/11 15:50 GH_A

GREELEY AND HANSEN 6640 INTECH BOULEVARD, SUITE 180 INDIANAPOLIS, INDIANA 46278	DESIGNED KRN DRAWN RKY CHECKED JMT	APPROVED SEAL AFFIXED JUNE 21, 2011	PAUL J. VOGEL REGISTERED No. PE 10200267 STATE OF INDIANA PROFESSIONAL ENGINEER
NO.	DATE	APPD	REVISION
SCALE NOT TO SCALE	CITY OF WEST LAFAYETTE, INDIANA WESTERN SANITARY SEWER INTERCEPTOR DIVISION V	CIVIL PAVEMENT & SIDEWALK DETAILS	FILE NAME 079140G22.DWG DWG G22 SHEET 22 OF 24 DATE JUNE 2011 REV 0

SPEED LIMIT (MPH)	INITIAL WARNING (FT)	ADDITIONAL WARNING (FT)	FLAGGER DISTANCE (FT)	TAPER (FT)	CONES (EA)	TAPER CONE SPACING (FT)
25	200	200	200	155	6	20
30	200	200	200	185	6	20
35	350	350	350	220	12	20
40	350	350	350	270	12	20
45	500	500	500	320	18	20
50	500	500	500	380	18	20
55	500	500	500	435	18	20

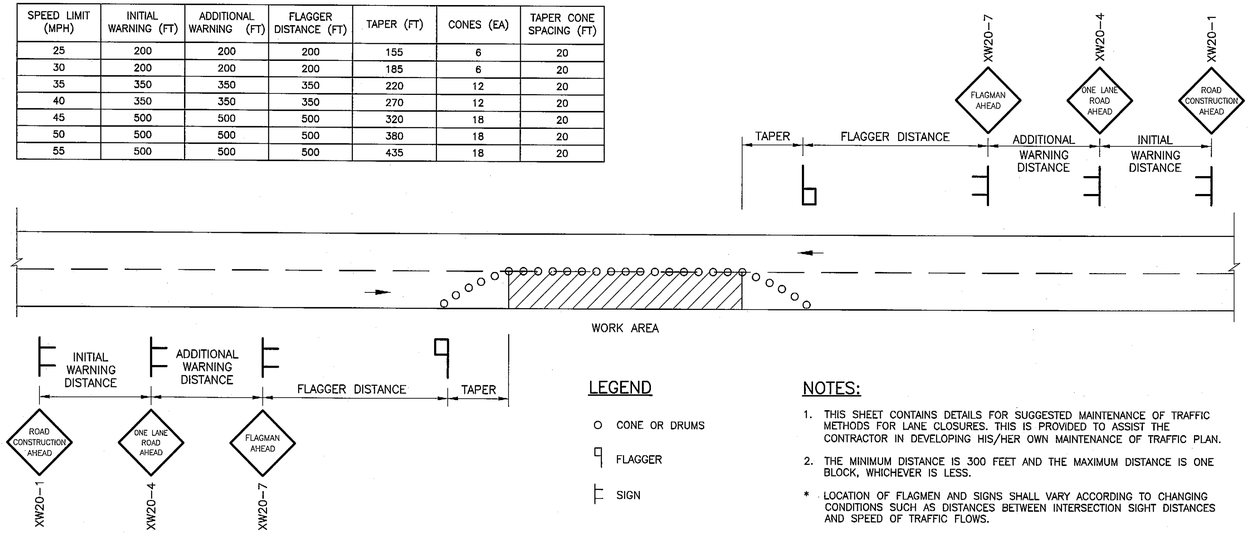

LEGEND

- CONE OR DRUMS
- FLAGGER
- SIGN

NOTES:

1. THIS SHEET CONTAINS DETAILS FOR SUGGESTED MAINTENANCE OF TRAFFIC METHODS FOR LANE CLOSURES. THIS IS PROVIDED TO ASSIST THE CONTRACTOR IN DEVELOPING HIS/HER OWN MAINTENANCE OF TRAFFIC PLAN.
2. THE MINIMUM DISTANCE IS 300 FEET AND THE MAXIMUM DISTANCE IS ONE BLOCK, WHICHEVER IS LESS.

* LOCATION OF FLAGMEN AND SIGNS SHALL VARY ACCORDING TO CHANGING CONDITIONS SUCH AS DISTANCES BETWEEN INTERSECTION SIGHT DISTANCES AND SPEED OF TRAFFIC FLOWS.

SUGGESTED MAINTENANCE OF TRAFFIC DETAIL FOR TWO-LANE ROAD

SPEED LIMIT (MPH)	INITIAL WARNING (FT)	ADDITIONAL WARNING (FT)	TAPER (FT)	CONES (EA)	TAPER CONE SPACING (FT)
25	200	200	180	9	20
30	200	200	180	9	20
35	350	350	260	13	20
40	350	350	320	8	40
45	500	500	560	14	40
50	1600	2600	600	12	50
55	1600	2600	700	14	50

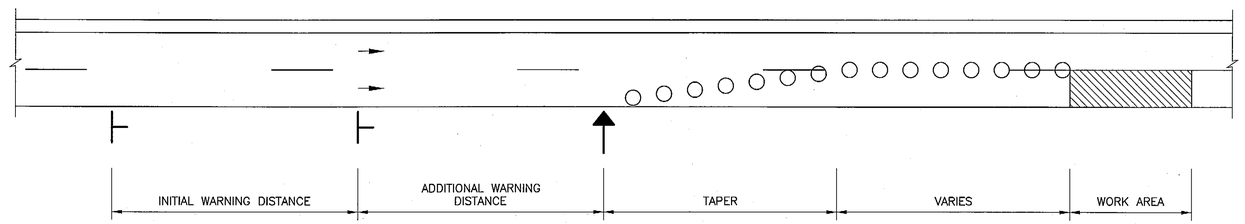

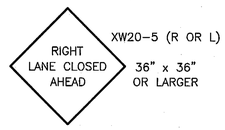

XW20-5 (R OR L)
36" x 36" OR LARGER

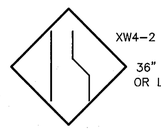

XW4-2 (R OR L)
36" x 36" OR LARGER

LEGEND

- ARROW BOARD SIGN
- CONE OR DRUMS
- SIGN

NOTES:

1. DISTANCES SHOWN ARE APPROXIMATE AND MAYBE ADJUSTED BY THE ENGINEER.
2. THE ARROW BOARD SIGN SHALL BE LOCATED AT THE BEGINNING OF THE TAPER AS SHOWN. IF PHYSICAL LIMITATION RESTRICTS PLACEMENT AS INDICATED, THEN IT SHALL BE PLACED AS CLOSE TO THE BEGINNING OF THE TAPERS AS POSSIBLE.
3. THE CONSTRUCTION SIGN SHALL BE UTILIZED DURING ANY CONSTRUCTION ACTIVITY ON THE ROADWAY. IF THE CONTRACTOR ELECTS TO RESTRICT TRAFFIC LANES ON THE ROADWAY, THE CONTRACTOR SHALL SUBMIT A MAINTENANCE OF TRAFFIC PLAN FOR APPROVAL UTILIZING TRAFFIC CONTROL DEVICES [IE FLASHING ARROW SIGNS, BARRICADES, SIGNS, (IE ROAD CONSTRUCTION AHEAD, END CONSTRUCTION, ETC) FLAG MEN, STANDARD TRAFFIC DRUMS, TEMPORARY PAVEMENT MARKINGS, ETC] WHICH ARE IN ACCORDANCE WITH INDOT AND LOCAL STANDARDS. THE COST OF WORK AND PROVIDING TRAFFIC CONTROL DEVICES SHALL BE INCLUDED IN THE LUMP SUM COST OF "MAINTAINING TRAFFIC".
4. ERECT AND MAINTAIN ALL NECESSARY SIGNS, BARRICADES, DETOUR SIGNS, AND WARNING DEVICES REQUIRED TO SAFELY DIRECT TRAFFIC OVER OR AROUND THE PART OF THE HIGHWAY WHERE PERMITTED OPERATIONS ARE TO BE DONE SO LONG AS THE WORK DOES NOT INTERFERE WITH TRAFFIC IN ACCORDANCE WITH SECTION VI OF THE INDIANA MUTCD.
5. THIS SHEET CONTAINS DETAILS FOR SUGGESTED MAINTENANCE OF TRAFFIC METHODS FOR LANE CLOSURES. THIS IS PROVIDED TO ASSIST THE CONTRACTOR IN DEVELOPING HIS/HER OWN MAINTENANCE OF TRAFFIC PLAN.

SUGGESTED MAINTENANCE OF TRAFFIC DETAIL FOR MULTI-LANE ROAD

FILE: 079140G2XX-1 1:1 02/16/11 08:21 GH-A

GREELEY AND HANSEN
6640 INTECH BOULEVARD, SUITE 180
INDIANAPOLIS, INDIANA 46278

DESIGNED KRN
DRAWN LG
CHECKED JMT

APPROVED
SEAL AFFIXED
JUNE 21, 2011

PAUL J. VOGEL REGISTERED No. PE 10200267 STATE OF INDIANA PROFESSIONAL ENGINEER

NO.	DATE	APPD	REVISION

SCALE
NOT TO SCALE

CITY OF WEST LAFAYETTE, INDIANA
WESTERN SANITARY SEWER INTERCEPTOR
DIVISION V

CIVIL
SUGGESTED MAINTENANCE OF TRAFFIC FOR TWO OR MULTI-LANE ROAD

FILE NAME 079140G23.DWG
DWG G23
SHEET 23 OF 24
DATE JUNE 2011 REV 0

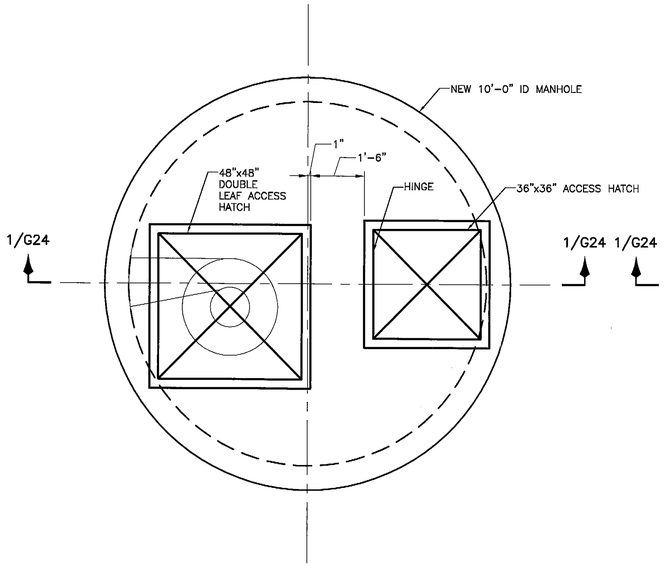

COVER PLAN
SCALE: 1/2"=1'-0"

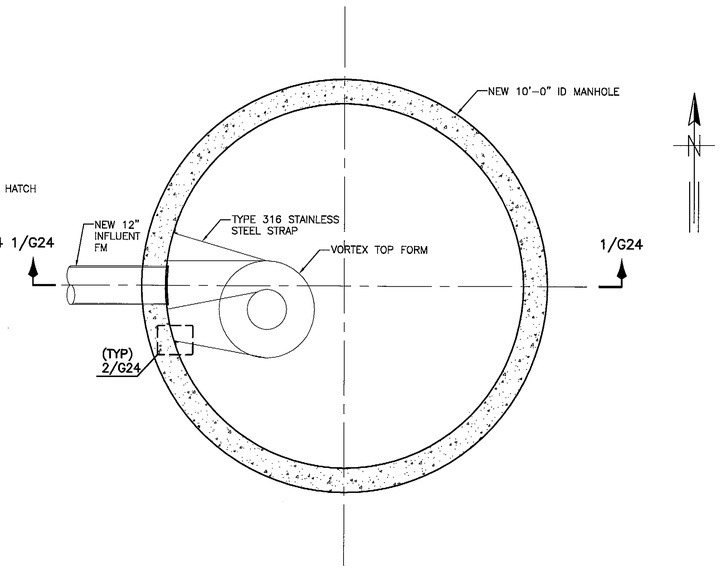

PLAN AT EL 678'-6"
SCALE: 1/2"=1'-0"

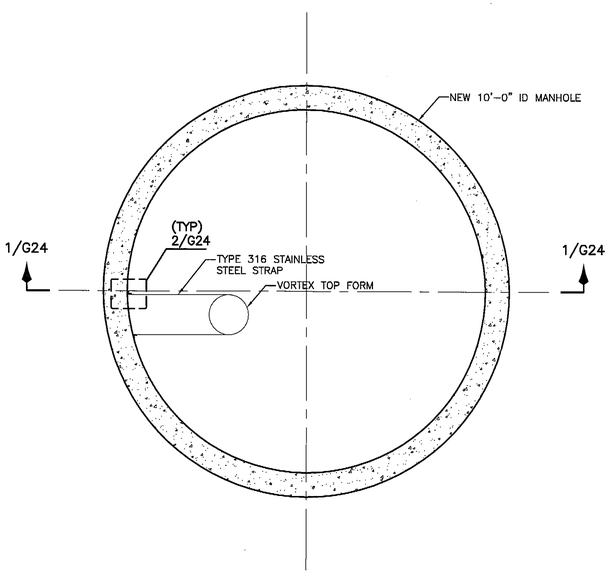

PLAN AT EL 668'-0"
SCALE: 1/2"=1'-0"

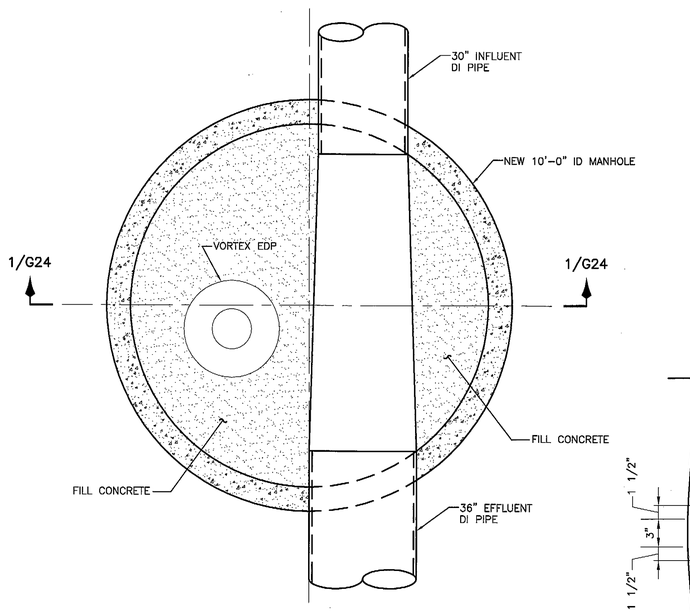

PLAN AT EL 655'-6"
SCALE: 1/2"=1'-0"

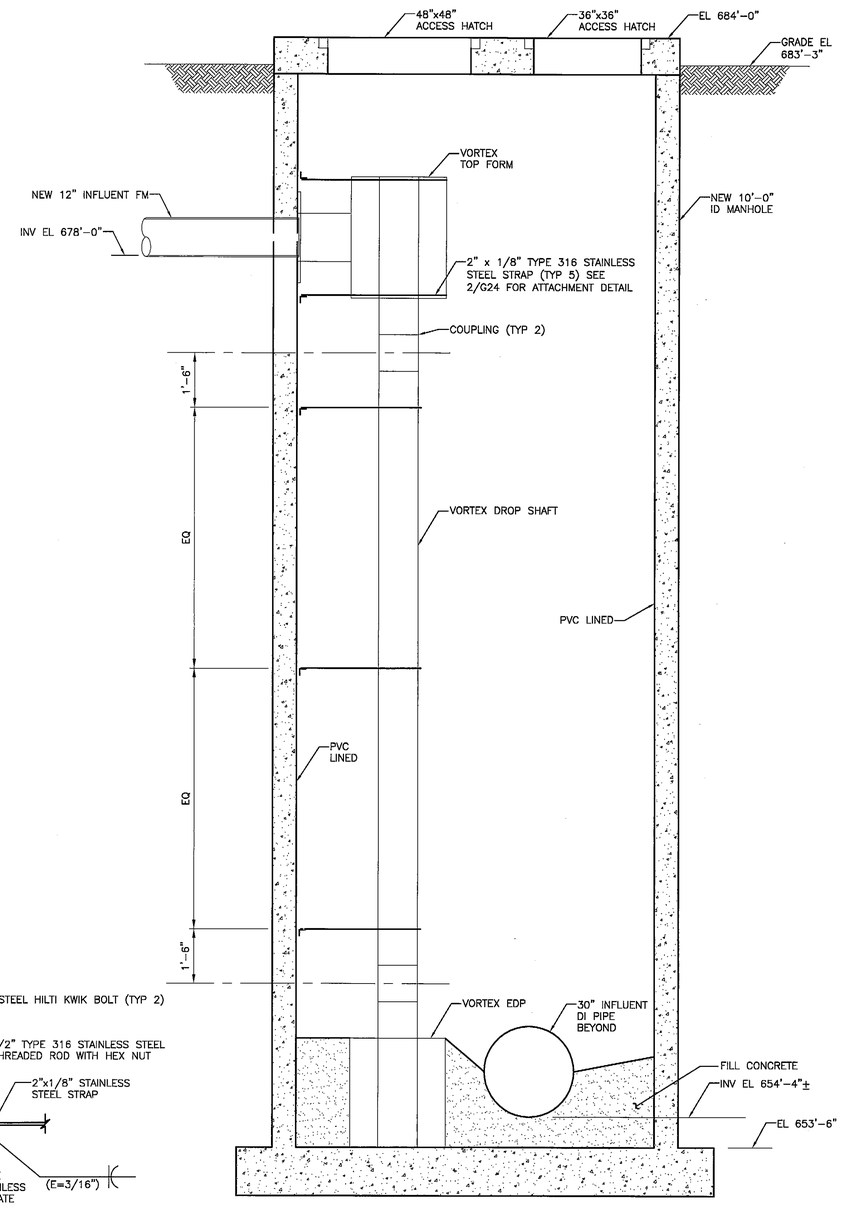

SECTION 1/G24
SCALE: 1/2"=1'-0"

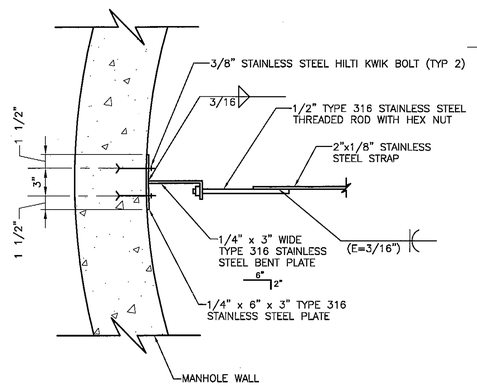

DETAIL 2/G24
SCALE: 1 1/2"=1'-0"

MANHOLE DESIGN CRITERIA:

1. MAXIMUM ALLOWABLE BEARING PRESSURE IS 4000 PSF.
2. DESIGN WATER ELEVATION = 673'-3"
3. LATERAL EARTH PRESSURE
   AT-REST PRESSURE COEFFICIENT, Ko = 0.53
   TOTAL SOIL UNIT WEIGHT = 125 PCF
4. MANHOLE LID LIVE LOAD = 100 PSF
5. ACCESS HATCHES TO BE TYPE 316 STAINLESS STEEL, 300 PSF LOAD RATED.

Fink Roberts & Petrie, Inc.
FRP
Consulting Engineers
4040 Vincennes Circle Suite 300
Indianapolis, Indiana 46268

GREELEY AND HANSEN
6640 INTECH BOULEVARD, SUITE 180
INDIANAPOLIS, INDIANA 46278

DESIGNED	JDW
DRAWN	AMS
CHECKED	JDW

APPROVED
SEAL AFFIXED
JUNE 21, 2011

WILLIAM E. PFEIFFER, III
REGISTERED
No. 20809
STATE OF INDIANA
PROFESSIONAL ENGINEER

NO.	DATE	APPD	REVISION

SCALE
1 0 1 2 3 4 5 FT 1/2"=1'-0"
1 0 1 FT 1 1/2"=1'-0"

CITY OF WEST LAFAYETTE, INDIANA

WESTERN SANITARY SEWER INTERCEPTOR
DIVISION V

STRUCTURAL

VORTEX INSERT

FILE NAME	01798AG24
DWG	G24
SHEET	24 OF 24
DATE	JUNE 2011
REV	0

06/23/11 09:48:35 \\Frp_nt\am\VAULT.D-\Projects\2010\10108\G24.DWG G&HFULL.CTB NAME: G24.DWG JDW