CITY OF

WEST LAFAYETTE, INDIANA

TYPICAL CONSTRUCTION GUIDELINES AND DETAILS

2005

CITY OFFICIALS

JAN H. MILLS, MAYOR
JUDITH C. RHODES, CITY CLERK-TREASURER
ROBERT L. BAUMAN, CITY ATTORNEY
DAVID M. BUCK, P.E., CITY ENGINEER

BOARD OF PUBLIC WORKS AND SAFETY

JAN H. MILLS, PRESIDENT
GILBERT T. SATTERLY, MEMBER
JANET L. BROYLES, MEMBER

CITY COUNCIL

PATTY L. O'CALLAGHAN, PRESIDENT, AT-LARGE
MATTHEW L. PLOMIN, DISTRICT 1
CARL D. GRIFFIN, DISTRICT 2
ANN H. HUNT, DISTRICT 3
GILBERT T. SATTERLY, DISTRICT 4
GERRY J. KEEN, DISTRICT 5
RANDOLPH P. TRUITT, AT-LARGE

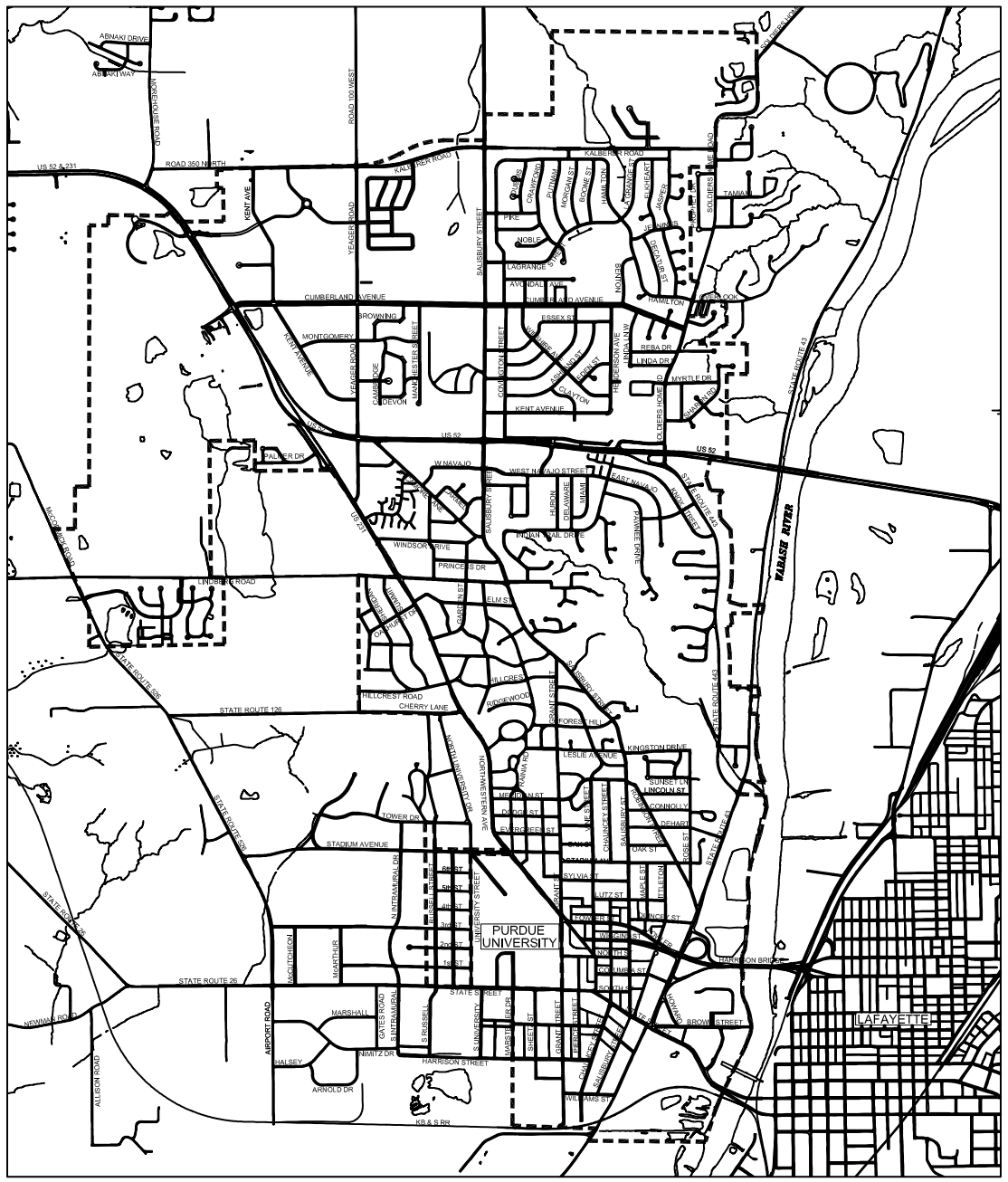

INDEX

1. TITLE AND INDEX
2. GENERAL NOTES AND GUIDELINES FOR UTILITY LOCATIONS
3. PAVEMENT AND CURB TYPICAL SECTIONS AND NOTES
4. CONCRETE PAVEMENT, SIDEWALK, DRIVEWAY TYPICAL DETAIL AND NOTES
5. PAVEMENT REPAIR AND RESTORATION TYPICAL DETAILS AND NOTES
6-7. SANITARY SEWER AND MISC. UTILITY TYPICAL DETAILS AND NOTES
8. STORM SEWER TYPICAL DETAILS AND NOTES
9. STORM SEWER STRUCTURES, DRAINAGE AND EROSION CONTROL TYPICAL DETAILS AND NOTES
10. EROSION CONTOL TYPICAL DETAILS AND NOTES
11-12. LANDSCAPING STANDARD DETAILS AND SPECIFICATIONS

APPROVED BY THE WEST LAFAYETTE BOARD OF PUBLIC WORKS AND SAFETY ON JULY 5, 2005.

City of West Lafayette
City Hall, 609 West Navajo
West Lafayette, IN 47906

TYPICAL CONSTRUCTION GUIDELINES AND DETAILS

Date JULY 2005	Sheet 1 of 12

Holey Moley	(800) 382-5544
City Engineer	(765) 775-5130
Public Works Department	(765) 775-5145
Development Department	(765) 775-5160
Fire Department	(765) 775-5175
Police Department	(765) 775-5200

Project Name CITY STANDARDS	Project Sheet Number of

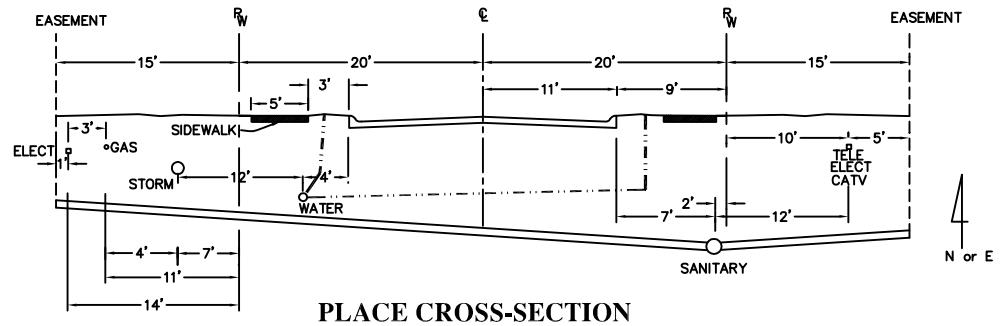

PLACE CROSS-SECTION

NOT TO SCALE

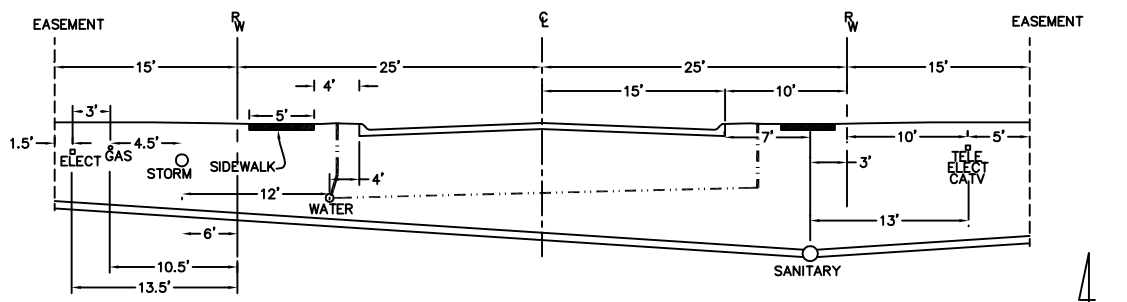

RESIDENTIAL LOCAL CROSS-SECTION

NOT TO SCALE

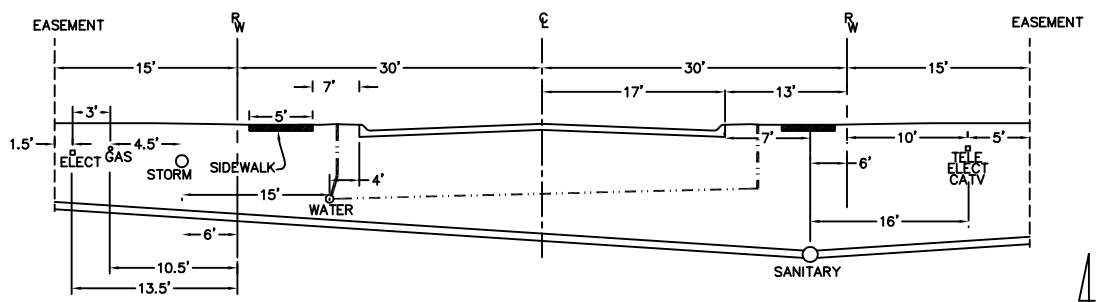

NON-RESIDENTIAL LOCAL CROSS-SECTION

NOT TO SCALE

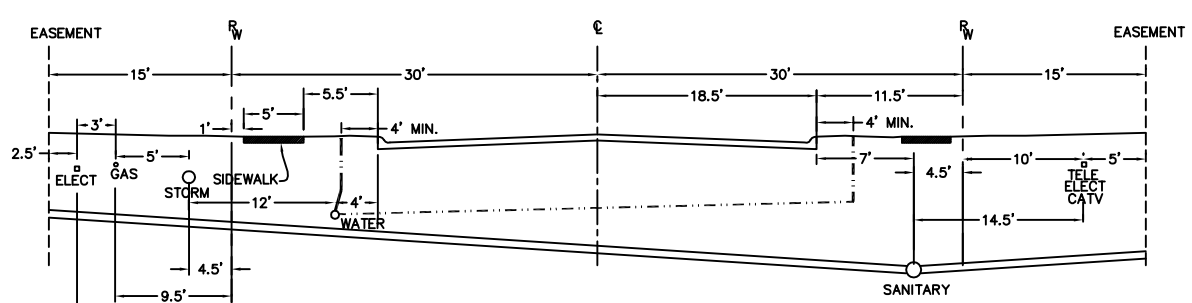

RESIDENTIAL COLLECTOR CROSS-SECTION

NOT TO SCALE

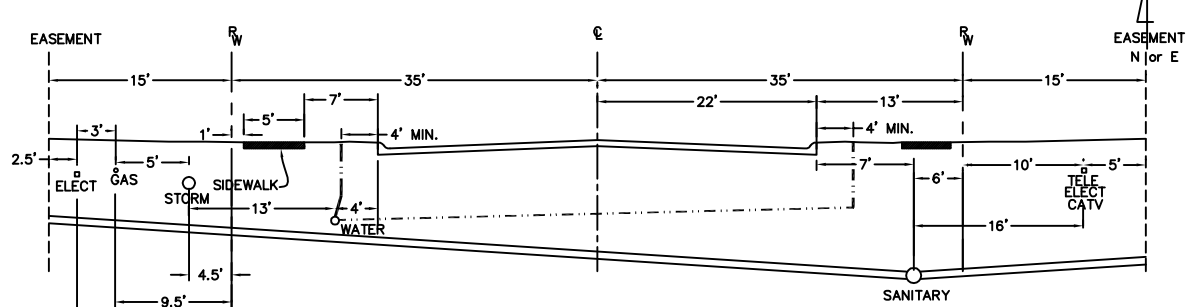

NON-RESIDENTIAL COLLECTOR CROSS-SECTION

NOT TO SCALE

USE NORTH AND EAST FOR DIRECTIONAL CONTROL.

GUIDELINES FOR UTILITY LOCATIONS WITHIN THE ROAD RIGHT-OF-WAY AND/OR UTILITY EASEMENTS.

N or E

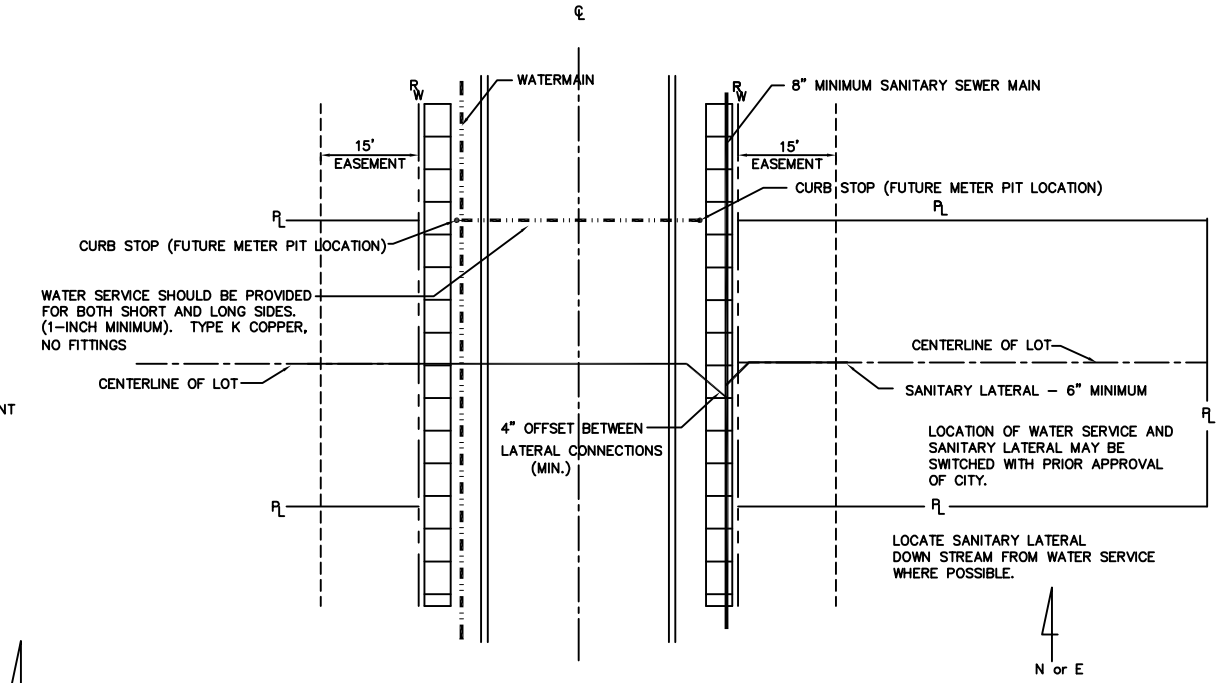

USE NORTH AND EAST FOR DIRECTIONAL CONTROL.

GUIDELINES FOR UTILITY LOCATIONS WITHIN THE ROAD RIGHT-OF-WAY AND/OR UTILITY EASEMENTS.

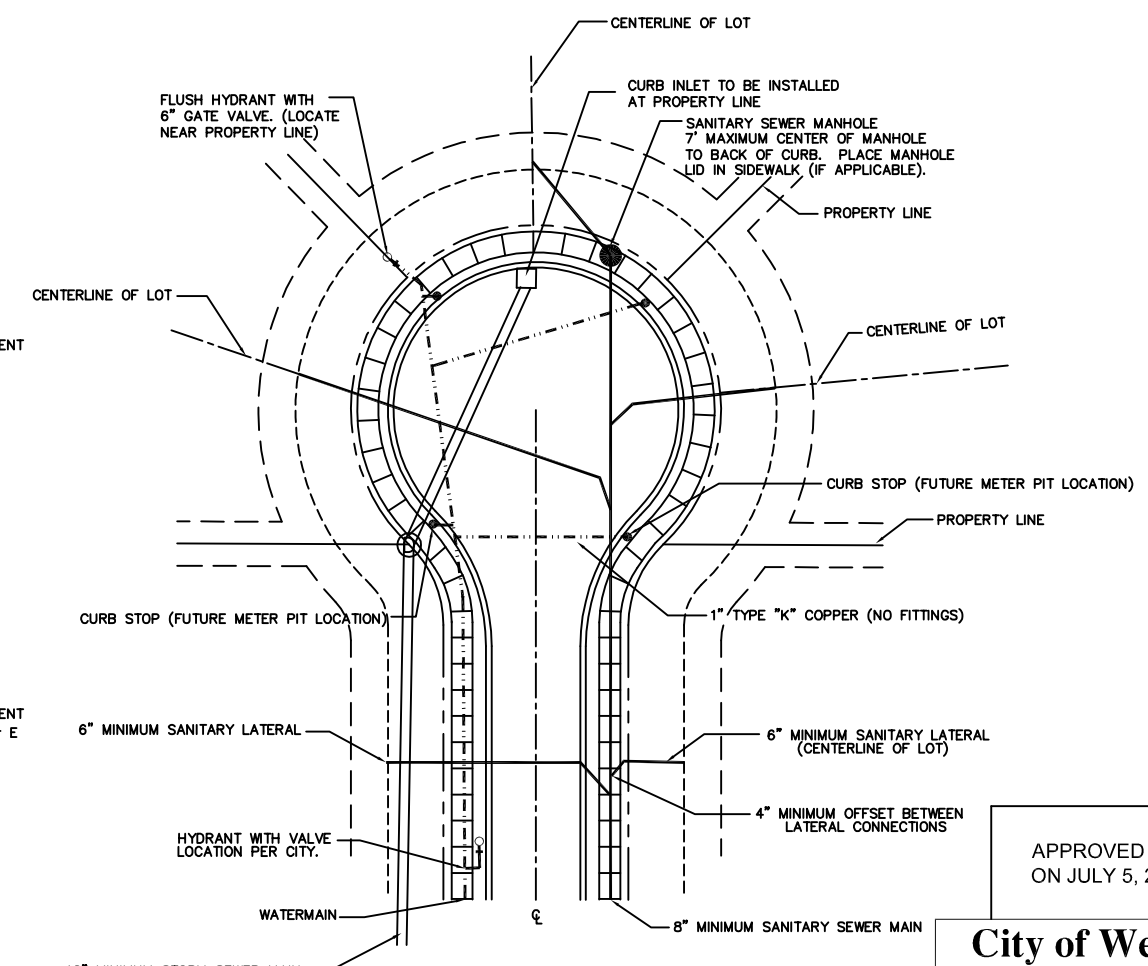

USE NORTH AND EAST FOR DIRECTIONAL CONTROL.

GUIDELINES FOR UTILITY LOCATIONS WITHIN THE ROAD RIGHT-OF-WAY AND/OR UTILITY EASEMENTS.

N or E

UTILITY LOCATIONS

NOT TO SCALE

GENERAL NOTES:

1. CONTRACTOR SHALL VERIFY THE EXACT LOCATION OF ALL UNDERGROUND UTILITIES AT LEAST 24 HOURS PRIOR TO ANY CONSTRUCTION OR EXCAVATION. DURING CONSTRUCTION, ALL UTILITIES SHALL BE ADEQUATELY SUPPORTED TO MINIMIZE DAMAGE.
2. ALL PERMITS AND EASEMENTS WILL BE OBTAINED BY THE OWNER WITH ANY REQUIRED INSURANCE OR BONDS TO BE PROVIDED BY THE CONTRACTOR PRIOR TO THE START OF WORK ON THE PROJECT.
3. ALL VERTICAL CONTROL SHALL BE ON AMERICAN VERTICAL DATUM (NAVD 1988). HORIZONTAL CONTROL SHALL BE ON NAD STATE PLANE COORDINATES (NAD83).
4. WHEREVER PROPRIETARY EQUIPMENT IS SPECIFIED, "OR APPROVED EQUAL" IS IMPLIED. ALL PROPOSALS FOR SUBSTITUTION SHALL BE SUBMITTED TO THE CITY IN WRITING FOR APPROVAL PRIOR TO USE.
5. ALL AREAS DISTURBED BY THE CONSTRUCTION PROCESS SHALL BE FERTILIZED AND SEEDED. ADEQUATE MULCHING SHALL BE PLACED AFTER SEEDING AND FERTILIZING. IT SHALL BE THE CONTRACTOR'S RESPONSIBILITY TO SEE THAT ADEQUATE GROWTH IS ESTABLISHED. SODDING WILL BE REQUIRED AS SHOWN ON THE PLANS.
6. TRENCHES UNDER PAVED AREAS (EXCLUDING SIDEWALKS) SHALL BE BACKFILLED WITH GRANULAR MATERIAL PER INDIANA DEPARTMENT OF TRANSPORTATION "STANDARD SPECIFICATIONS", 1999 EDITION, SECTION 211, AND COMPACTED IN LIFTS. GRANULAR MATERIAL TO EXTEND FIVE FEET BEYOND THE LIMITS OF THE PAVED AREA WITH A 1:1 SLOPE TO THE BOTTOM OF THE TRENCH. FLOWABLE MORTAR PER SECTION 213 OF INDIANA DEPARTMENT OF TRANSPORTATION "STANDARD SPECIFICATIONS", 1999 EDITION, MAY BE USED IN LIEU OF GRANULAR MATERIAL WITH PRIOR APPROVAL OF THE CITY ENGINEER'S OFFICE.
7. INSTALLATION OF, OR PROVISIONS FOR, THE INSTALLATION OF ALL UNDERGROUND UTILITIES, INCLUDING SERVICE LATERALS, TO BE PLACED UNDER THE PAVEMENTS SHALL BE ESTABLISHED PRIOR TO THE CONSTRUCTION OF THE PAVEMENTS.
8. CONTRACTOR SHALL CONTACT THE CITY IF ANY DAMAGE TO CITY UTILITIES OCCURS. DAMAGE TO CITY'S SEWERS BY CONTRACTORS WILL BE BE REPAIRED BY CITY'S SEWER DEPT. WITH ALL COSTS OF REPAIR TO BE PAID BY THE CONTRACTOR UNLESS OTHERWISE DIRECTED BY THE CITY. OTHER DAMAGED UTILITIES SHALL BE REPAIRED IN ACCORDANCE WITH THE AFFECTED UTILITY'S REPAIR POLICY.
9. 1'-6" VERTICAL SEPARATION AND 10'-0" HORIZONTAL SEPARATION IS TO BE MAINTAINED BETWEEN WATERMAINS, HYDRANTS AND SEWERS (STORM AND SANITARY).
10. THE CONTRACTOR IS RESPONSIBLE FOR MAINTAINING A SAFE CONSTRUCTION SITE AND FOR KEEPING SURROUNDING STREETS NEAT AND CLEAN. THE CONTRACTOR WILL PROVIDE ALL TRAFFIC CONTROL REQUIRED ON PUBLIC WAYS NEAR THE PROJECT.
11. THE CONSTRUCTION WORK SHALL CONFORM TO THE REQUIREMENTS OF ALL AGENCIES HAVING JURISDICTION OVER THE PROJECT.
12. THE CONTRACTOR WILL NOTIFY THE APPROPRIATE GOVERNMENTAL AGENCIES AT LEAST 48 HOURS PRIOR TO STARTING OR RESUMING WORK ON A PROJECT.
13. THE CONTRACTOR WILL PROVIDE SAFE ACCESS TO THE CONSTRUCTION SITE FOR ALL INSPECTORS AND WILL PROVIDE MATERIAL SAMPLES FOR TESTING.
14. INFORMATION REQUIRED FOR PREPARING "AS-BUILT" DRAWINGS MUST BE RECORDED PRIOR TO THE BACKFILLING OF ANY UNDERGROUND FACILITY.
15. TOP OF MANHOLE FRAMES TO BE SET AT PROPOSED YARD OR SIDEWALK GRADE WHEN LOCATED IN FRONT YARD AREA OF LOT OR RIGHT-OF-WAY.
16. ALL SIGN, MARKINGS AND OTHER TRAFFIC CONTROL DEVICES SHALL COMPLY WITH INDOT STANDARDS AND THE INDIANA MUTCD.
17. FOR UTILITY PLACEMENT FOR OTHER THAN SINGLE FAMILY RESIDENCES, CONTACT CITY ENGINEER'S OFFICE FOR REQUIREMENTS.
18. SIDEWALK WIDTH SHALL BE IN ACCORDANCE WITH THE CURRENT SUBDIVISION ORDINANCE.
19. SIDEWALK PLACEMENT SHALL BE REFERENCED FROM THE RIGHT-OF-WAY.
20. REQUESTS FOR ANY ALTERATION OR DEVIATION FROM THE POLICIES OUTLINED IN THE CITY OF WEST LAFAYETTE TYPICAL CONSTRUCTION GUIDLEINES AND DETAILS WILL BE CONSIDERED ON A CASE BY CASE BASIS. THE CONSTRUCTION GUIDELINES AND DETAILS SHOULD BE CONSIDERED A GUIDELINE AND EXTREME CONDITIONS OR SITUATIONS MAY WARRANT AN EXEMPTION. SUBMIT REQUESTS IN WRITING TO THE CITY ENGINEER. THE CITY ENGINEER WILL REVIEW THE REQUEST AND MAKE A DETERMINATION IF AN EXEMPTION IS APPROVED OR DISAPPROVED.

APPROVED BY THE WEST LAFAYETTE BOARD OF PUBLIC WORKS AND SAFETY ON JULY 5, 2005.

City of West Lafayette
City Hall, 609 West Navajo
West Lafayette, IN 47906

General Notes and Guidelines for Utility Locations

Date	July 2005	Sheet	2 of 12

Holey Moley	(800) 382-5544
City Engineer	(765) 775-5130
Public Works Department	(765) 775-5145
Development Department	(765) 775-5160
Fire Department	(765) 775-5175
Police Department	(765) 775-5200

Project Name	Project Sheet Number
CITY STANDARDS	of

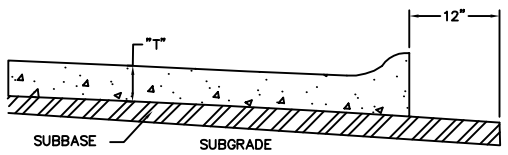

CONCRETE RIGID PAVEMENT SECTION

NOT TO SCALE

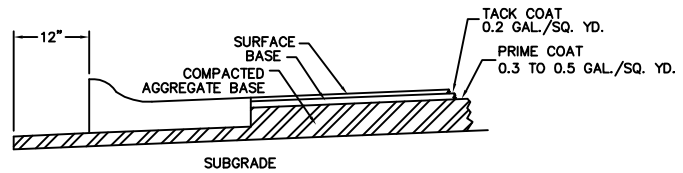

ASPHALT PAVEMENT SECTION

NOT TO SCALE

BASE TO BE CONSTRUCTED PRIOR TO CONSTRUCTION OF CURB AND GUTTER

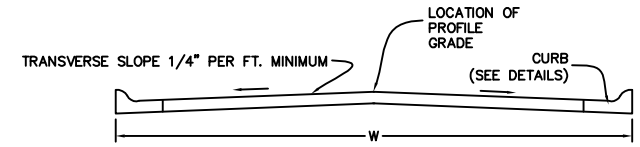

STANDARD STREET CROSS-SECTION

NOT TO SCALE

CLASS OF STREET (1)	CURB (2)	SUBGRADE THICKNESS	CONCRETE (4) PAVEMENT		ASPHALT PAVEMENT (3)			
			"T" (PVT.THICKNESS)	TRANSVERSE JOINT SPACING	9.5 mm HMA SURFACE	19.0 mm HMA INTERM.	25.0 mm HMA BASE	#53 (C.A.B.)
PRIMARY ARTERIAL	TYPE III	*	8"	--	1.5"	2.5"	8" (2-4" LIFTS)	6"
SECONDARY ARTERIAL	TYPE III	*	8"	--	1.5"	2.5"	8" (2-4" LIFTS)	6"
COLLECTOR	TYPE I (RESIDENTIAL) TYPE III (NON-RESIDENTIAL)	6"	6"	14'	1.5"	--	4.5"	12" (2-6" LIFTS)
LOCAL AND PLACE	TYPE I (RESIDENTIAL) TYPE II (NON-RESIDENTIAL)	6"	6"	14'	1.5"	--	4.5"	12" (2-6" LIFTS)

* TO BE DETERMINED BY CITY

ITEM	MATERIAL TYPE	INDOT SPECIFICATIONS SECTION
SUBGRADE	EARTH	207
SUBBASE		302
CURB	COMBINED CURB AND GUTTER	605.04-a,b,c,f,g,h,i
BASE (AGGREGATE)	COMPACTED AGGREGATE	303
BASE (ASPHALT)	ASPHALTIC CONCRETE	401,402,403 (5D) (5)
INTERMEDIATE	ASPHALTIC CONCRETE	401,402,403
SURFACE	ASPHALTIC CONCRETE	401,402,403
PRIME COAT	MC-70, AE-P	408
TACK COAT	AE-T	409
PAVEMENT (CONCRETE)	NON-REINFORCED CONCRETE	501
SIDEWALKS, RAMPS, ETC.	PORTLAND CEMENT CONCRETE	604
JOINT SEALANT	SEALANT	906

NOTES:

(1) AS DEFINED BY THE SUBDIVISION ORDINANCE OF TIPPECANOE COUNTY.

(2) SEE SHEET 11 FOR CURB INLET DETAILS. PERIMETER DRAIN SHALL EXTEND 50 FT. EITHER DIRECTION FROM THE CURB INLET.

(3) 8" LIME TREATED SUBBASE CAN BE SUBSTITUTED FOR 6" OF #53 AGGREGATE BASE UNDER ASPHALT. LIME TREATMENT CAN BE USED IN AREAS OF NEW CONSTRUCTION ONLY AND WITH THE CITY ENGINEER'S APPROVAL.

(4) SUBBASE FOR CONCRETE PAVEMENTS SHOULD BE DETERMINED ACCORDING TO A GEOTECHNICAL INVESTIGATION AND PAVEMENT DESIGN CALCULATIONS (TO BE APPROVED BY THE CITY ENGINEERING). IN THE ABSENCE OF A GEOTECHNICAL INVESTIGATION AND PAVEMENT DESIGN, THE SUBBASE SHALL BE 3" OF #8s OR #43s CRUSHED FOR DRAINAGE AND 4" OF #53s FOR SEPARATION.

(5) PAVEMENT SECTIONS WHERE UNDERDRAINS ARE REQUIRED SHALL BE AS APPROVED BY THE CITY ENGINEER.

(6) ALTERNATE PAVEMENT DESIGNS MAY BE SUBMITTED FOR APPROVAL BY THE CITY ENGINEER.

TYPICAL PAVEMENT SECTIONS AND NOTES

NOT TO SCALE

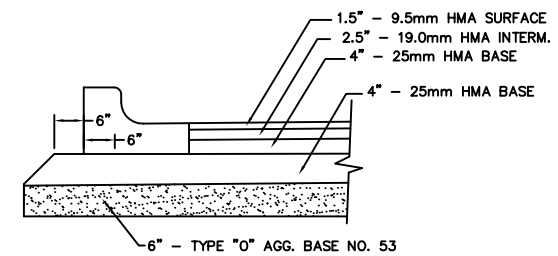

(INTERSECTIONS OF PLACE, LOCAL, OR COLLECTOR WITH ARTERIAL)

ARTERIAL APPROACH PAVEMENT

NOT TO SCALE

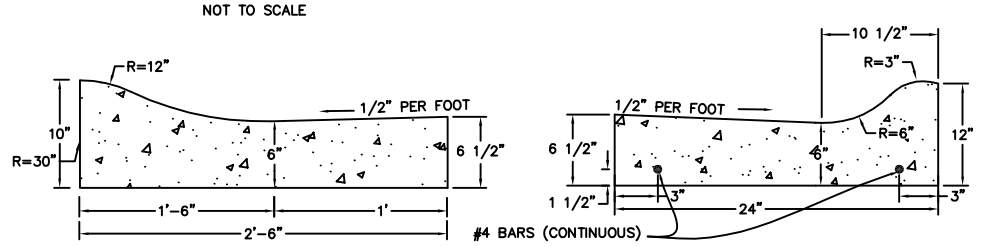

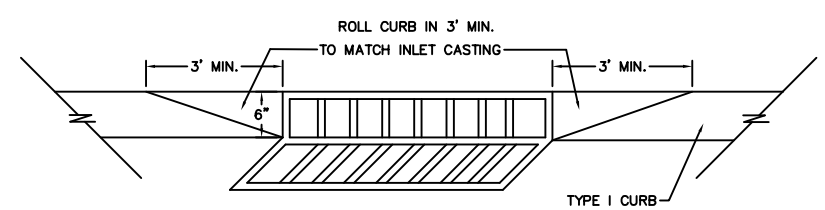

CURB TRANSITION DETAIL

NOT TO SCALE

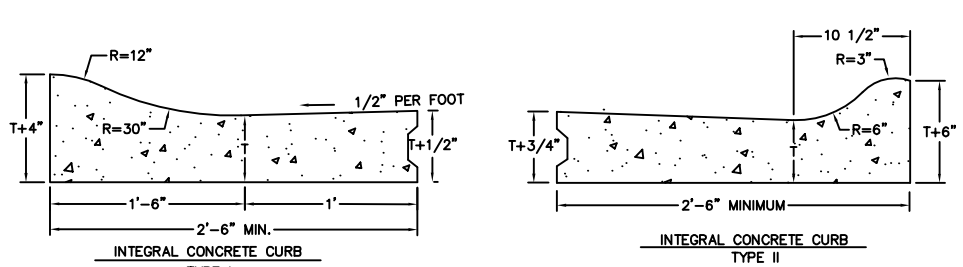

CURB SECTIONS

NOT TO SCALE

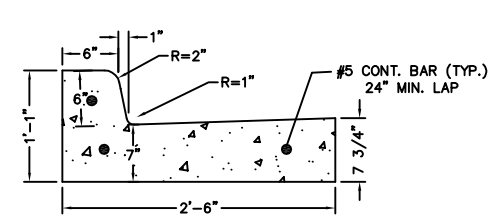

COMBINED CONCRETE CURB AND GUTTER

NOT TO SCALE TYPE III

PAVEMENT CONSTRUCTION NOTES:

1. INSTALLATION OF OR PROVISIONS FOR THE INSTALLATION OF ALL UNDERGROUND UTILITIES, INCLUDING SERVICE LATERALS, TO BE PLACED UNDER PAVEMENT SHALL BE ESTABLISHED PRIOR TO THE CONSTRUCTION OF THE PAVEMENT.
2. ALL PAVEMENT, CURBS, SIDEWALKS, RAMPS, ETC. SHALL BE CONSTRUCTED IN ACCORDANCE WITH THE SPECIFICATIONS AND IN CLOSE CONFORMANCE WITH THE LINES, GRADES, THICKNESSES AND TYPICAL CROSS SECTIONS SHOWN ON THE PLANS. MATERIALS AND WORKMANSHIP SHALL BE IN ACCORDANCE WITH DESIGNATED SECTIONS OF THE INDIANA DEPARTMENT OF TRANSPORTATION "STANDARD SPECIFICATIONS", 1999 EDITION.
3. SUBBASE AND SUBGRADE FILL MATERIAL SHALL BE COMPACTED TO A MINIMUM 95% OF THE MAXIMUM DRY DENSITY IN ACCORDANCE WITH ASTM D698.
4. WHEREVER RIGID PAVEMENT IS TO BE USED THE CONTRACTOR SHALL SUBMIT A DETAILED PAVING PLAN TO THE CITY ENGINEER. THE PAVING PLAN SHALL SHOW THE LOCATION AND TYPE OF JOINTING TO BE USED IN THE CONSTRUCTION. THE LOCATION AND TYPE OF JOINTING SHALL BE IN ACCORDANCE WITH THE CITY STANDARDS AND GUIDELINES.
5. WHENEVER SUBGRADE STABILIZATION IS TO BE USED THE CONTRACTOR SHALL SUBMIT A WRITTEN PLAN DETAILING THE APPLICATION METHOD. THE PLAN MUST COMPLY WITH THE STATE OF INDIANA ENVIRONMENTAL REGULATIONS AND STANDARDS AND BE APPROVED BY THE CITY ENGINEER.
6. RECYCLED CONCRETE MAY BE USED AS #53 AGG. BASE ON A CASE BY CASE BASIS UPON PRIOR WRITTEN APPROVAL OF THE CITY.
7. WHEREVER PROPRIETARY EQUIPMENT IS SPECIFIED, "OR APPROVED EQUAL" IS IMPLIED. ALL PROPOSALS FOR SUBSTITUTION SHALL BE SUBMITTED TO THE CITY IN WRITING FOR APPROVAL PRIOR TO USE.

QUALITY CONTROL REQUIREMENTS

1. ALL TESTING SHALL BE IN ACCORDANCE WITH THE LATEST INDOT STANDARD SPECIFICATIONS. WHERE PRACTICABLE, ALL TESTS SHALL BE WITNESSED BY THE CITY. CONTRACTOR SHALL COORDINATE TESTING SCHEDULE WITH THE CITY ENGINEER'S OFFICE. ALL TEST RESULTS SHALL BE SUBMITTED TO THE CITY ENGINEER'S OFFICE WITHIN 48 HOURS OF THE COMPLETION OF EACH TEST AND PRIOR TO PLACING ANY MATERIAL ON THE SUBBASE/SUBGRADE. THE FREQUENCY OF TESTING WHERE SHOWN IS A MINIMUM. ADDITIONAL TESTING MAY BE REQUIRED AT THE DIRECTION OF THE PUBLIC WORKS INSPECTOR.
2. THE DEVELOPER/CONTRACTOR SHALL RETAIN AN INDEPENDENT TESTING FIRM (UNLESS OTHERWISE NOTED) TO PERFORM THE FOLLOWING TESTING:

   A. SUBGRADE:

      1. COMPACTION (FILL SECTIONS): 1 TEST PER LIFT PER 500 LF OF SINGLE LANE WIDTH
      2. ADEQUACY OF SUBGRADES SHALL BE DETERMINED SOLELY BY THE PUBLIC WORKS INSPECTOR. A PROOFROLL SHALL BE PERFORMED ON ALL STREET SUBGRADE PRIOR TO PLACING STONE AND INSTALLING CURB. SUBGRADE SHALL MEET INDOT SPECIFICATION SECTION 207, EXCEPT THAT ONLY THE TOP 6" OF SUBGRADE SHALL BE TESTED FOR 100% STANDARD COMPACTION. PROOFROLLING THAT COMPLIES WITH INDOT SPECIFICATION SECTION 203.26 IS ALSO REQUIRED, EXCEPT THAT PROOFROLLING MAY ALSO BE ACCOMPLISHED USING A FULLY LOADED TANDUM DUMP TRUCK (G.V.W. - 48,000#) IN LIEU OF A RUBBER TIRED ROLLER. TIRE MARKS LESS THAN 1/2" ARE ACCEPTABLE. IF THE SUBGRADE DOES NOT PASS THESE SPECIFICATIONS, THEN SUBGRADE TREATMENTS, INCLUDING CHEMICAL MODIFICATION PERFORMED ACCORDING TO INDOT SPECIFICATIONS 207 AND 215, MAY BE DONE IN LIEU OF THE ABOVE DENSITY AND PROOFROLL SPECIFICATIONS.

   B. AGGREGATE SUBBASE:

      1. GRADATION - 1 TEST PER 1,000 TONS OR 1 PER WEEK
      2. COMPACTION - 1 TEST PER 500 LF OF SINGLE LANE WIDTH

   C. BITUMINOUS MATERIAL (BASE, INTERMEDIATE AND SURFACE):

      1. ASPHALT EXTRACTION - 1 TEST PER EACH TYPE OF MATERIAL USED PER JOB. TEST TO INCLUDE GRADATION, ASPHALT CONTENT, CRUSHED PARTICLE DETERMINATION AND DELETERIOUS DETERMINATION. TEST SHALL BE CERTIFIED PER INDOT CERTIFICATION REQUIREMENTS.
      2. DENSITY - THE TARGET DENSITY SHALL BE DETERMINED FROM A TEST STRIP CONSTRUCTED PER INDOT SPECIFICATIONS. THE TARGET DENSITY SHALL NOT BE LESS THAN 96% OF THE UNIT WEIGHT AT THE OPTIMUM BINDER CONTENT AS DETERMINED BY THE MIX DESIGN. THE DENSITY OF EACH SUBLOT WILL BE THE AVERAGE OF FIVE TESTS. A SUBLOT SHALL BE 1,000 LF OF SINGLE LANE WIDTH. BREAKDOWN ROLLER SHALL BE MINIMUM 10 TON OR APPROVED VIBRATORY.

   D. CONCRETE FOR CURBING AND DRIVEWAYS:

      1. AIR AND SLUMP - 1 TEST PER DAY FOR POURS OVER 20 CYS OR MINIMUM 1 PER WEEK
      2. COMPRESSIVE STRENGTH TESTS - 1 SET OF 4 TEST CYLINDERS PER EVERY 100 CYS OR MINIMUM OF 1 SET PER WEEK.
      3. CONCRETE STRENGTH SHALL BE A MINIMUM 4,000 PSI BEFORE OPEN TO TRAFFIC.

   E. CONCRETE FOR PAVEMENT - FREQUENCY OF TESTS SHALL BE IN ACCORDANCE WITH THE INDOT FREQUENCY TESTING MANUAL AS SET OUT IN THE SECTION TITLED "CONCRETE PAVEMENT AND STRUCTURE MATERIAL".

APPROVED BY THE WEST LAFAYETTE BOARD OF PUBLIC WORKS AND SAFETY ON JULY 5, 2005.

City of West Lafayette
City Hall, 609 West Navajo
West Lafayette, IN 47906

Holey Moley	(800) 382-5544
City Engineer	(765) 775-5130
Public Works Department	(765) 775-5145
Development Department	(765) 775-5160
Fire Department	(765) 775-5175
Police Department	(765) 775-5200

Date July 2005 | Sheet 3 of 12

Pavement and Curb

Typical Sections and Notes

Project Name: CITY STANDARDS

Project Sheet Number: of

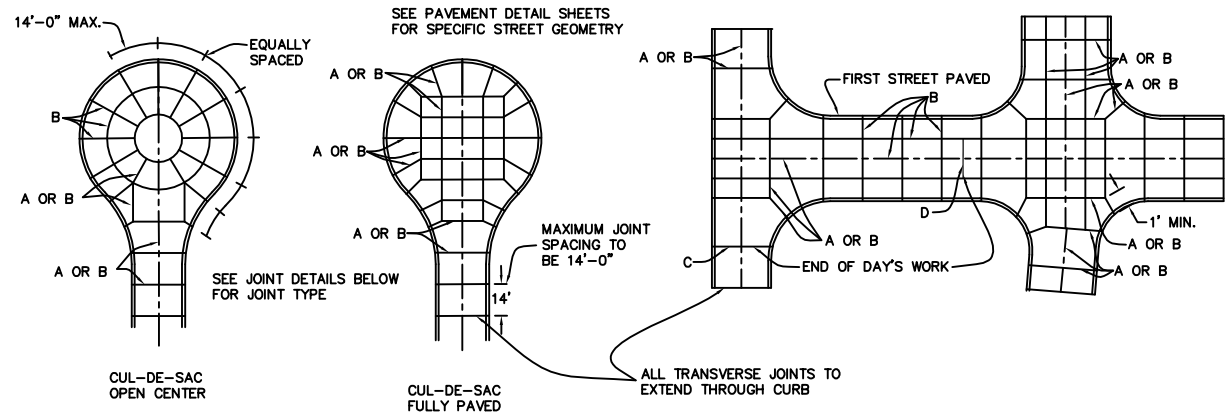

CONCRETE JOINT LAYOUT

NOT TO SCALE

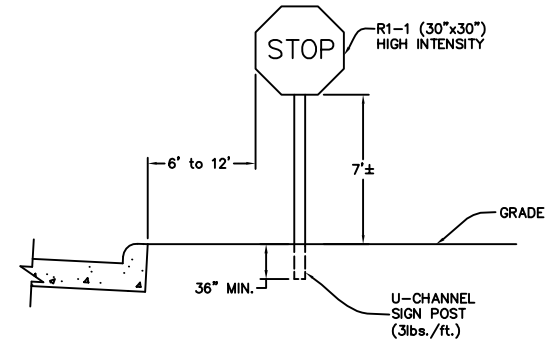

STOP SIGN

NOT TO SCALE

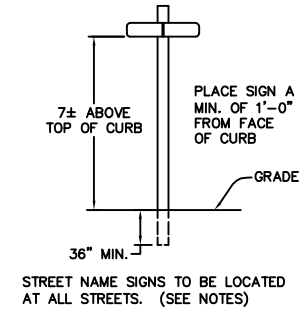

STREET NAME SIGN

NOT TO SCALE

TRAFFIC CONTROL AND SIGN NOTES:

1. THE CONTRACTOR/DEVELOPER SHALL PROVIDE AND INSTALL ALL STREET NAME AND ROAD SIGNS PER CURRENT INDOT STANDARDS AND CITY OF WEST LAFAYETTE GUIDELINES AND DETAILS. ALL TRAFFIC CONTROL DEVICES SHALL COMPLY WITH THE CURRENT INDIANA MUTCD.
2. MATERIALS SHALL BE FREE OF BURRS, PITS AND BLEMISHES AND SHALL PRESENT A SMOOTH, CLEAN SURFACE.
3. SIGN BLANKS SHALL MEET INDOT SPECIFICATIONS UNLESS OTHERWISE SPECIFIED.
4. ALL STREET NAME SIGNS SHALL HAVE GREEN BACKGROUND WITH WHITE LETTERS/NUMBERS ON EXTRUDED ALUMINUM BLADES.
5. STREET NAME TEXT SHALL BE HIGHWAY SERIES C OR D: ENGINEER GRADE 9" BLADES WITH 6" LETTERS/NUMBERS ON ALL STREETS.
6. STOP SIGNS SHALL BE 30" HIGH DENSITY.
7. SIGN BOLTS TO BE PER INDOT STANDARD SPECIFICATIONS. BOLTS ARE TO BE THEFT PROOF.
8. SPEED LIMIT SIGNS SHALL BE 24"X30" HIGH INTENSITY OR ENGINEER GRADE.
9. SIGN POST SHALL BE DRIVEN INTO THE GROUND. NO EXCAVATION SHALL BE DONE TO PLACE SIGNS.

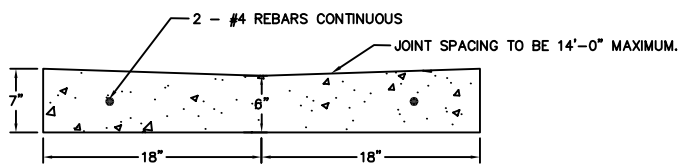

CONCRETE GUTTER - STREET

NOT TO SCALE

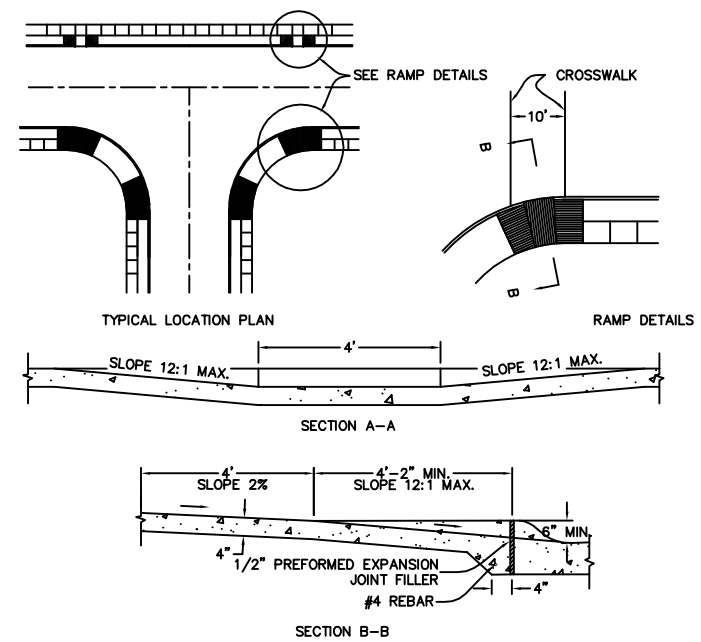

STANDARD HANDICAP RAMP DETAILS

NOT TO SCALE

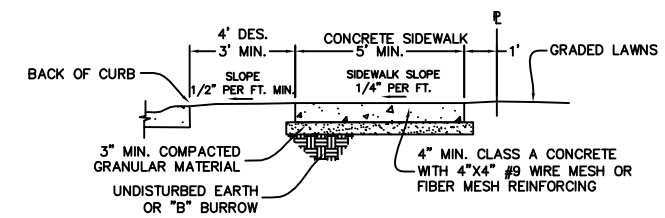

SIDEWALK SECTION

NOT TO SCALE

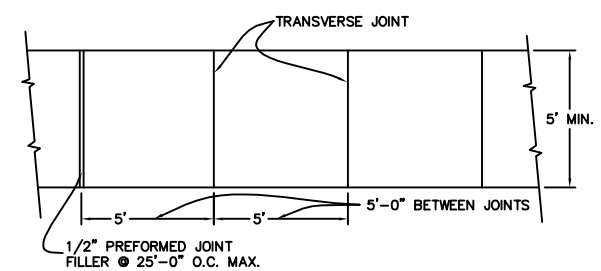

SIDEWALK PLAN

NOT TO SCALE

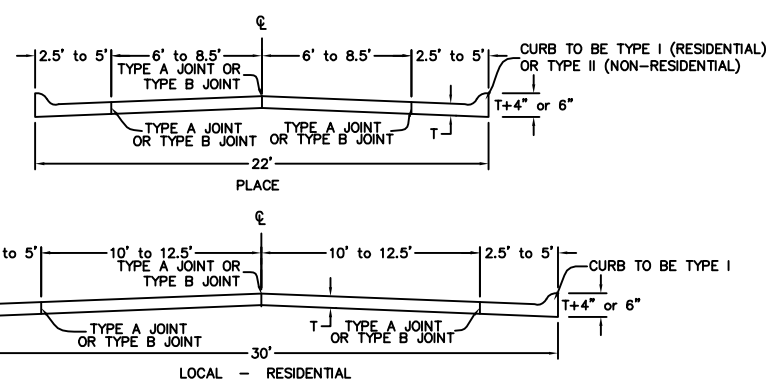

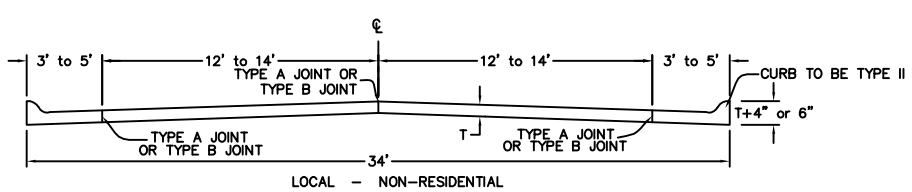

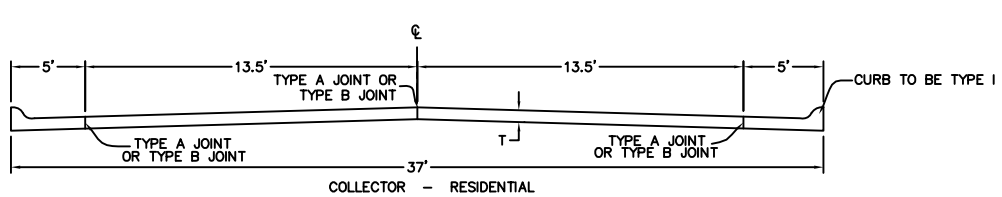

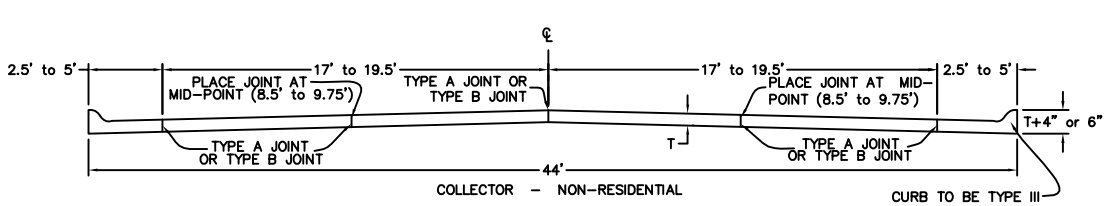

RIGID PAVEMENT STREET CROSS SECTIONS

NOT TO SCALE

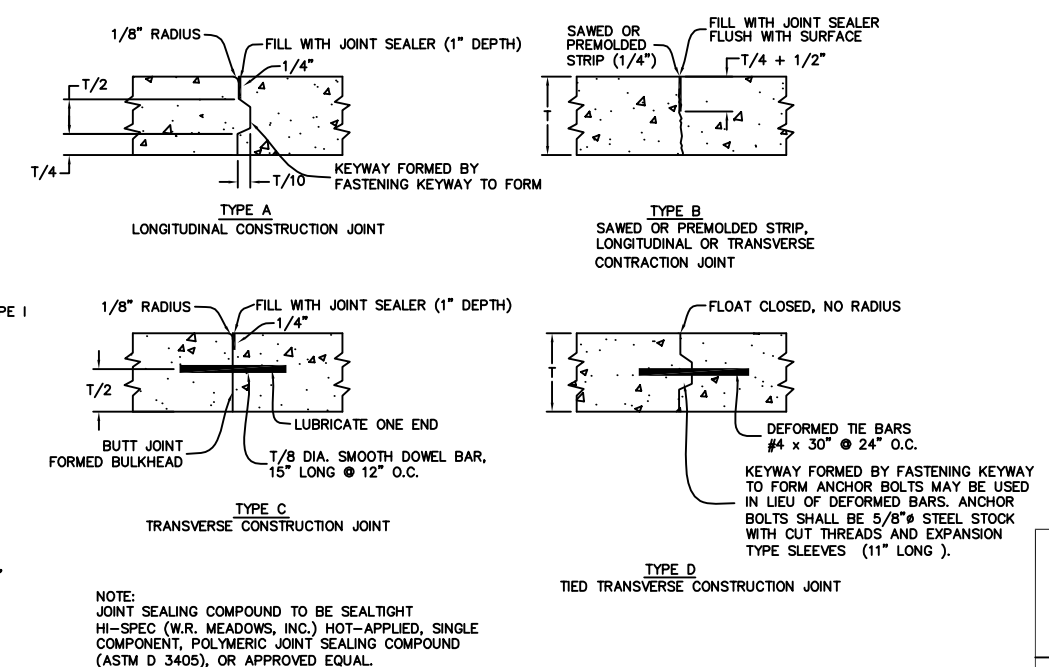

NOTE:
JOINT SEALING COMPOUND TO BE SEALTIGHT HI-SPEC (W.R. MEADOWS, INC.) HOT-APPLIED, SINGLE COMPONENT, POLYMERIC JOINT SEALING COMPOUND (ASTM D 3405), OR APPROVED EQUAL.

JOINT DETAILS

NOT TO SCALE

RESIDENTIAL – 6" PCCP ON 3" OF COMPACTED GRANULAR MATERIAL

COMMERCIAL – 6" PCCP ON 3" OF COMPACTED GRANULAR MATERIAL

MINIMUM APPROACH SECTION FOR PRIVATE DRIVES (WITHIN CITY RIGHT OF WAY)

APPROVED BY THE WEST LAFAYETTE BOARD OF PUBLIC WORKS AND SAFETY ON JULY 5, 2005.

City of West Lafayette
City Hall, 609 West Navajo
West Lafayette, IN 47906

Concrete Pavement, Sidewalk, and Driveway
Typical Sections and Notes

Date July 2005	Sheet 4 of 12

Holey Moley	(800) 382-5544
City Engineer	(765) 775-5130
Public Works Department	(765) 775-5145
Development Department	(765) 775-5160
Fire Department	(765) 775-5175
Police Department	(765) 775-5200

Project Name CITY STANDARDS	Project Sheet Number of

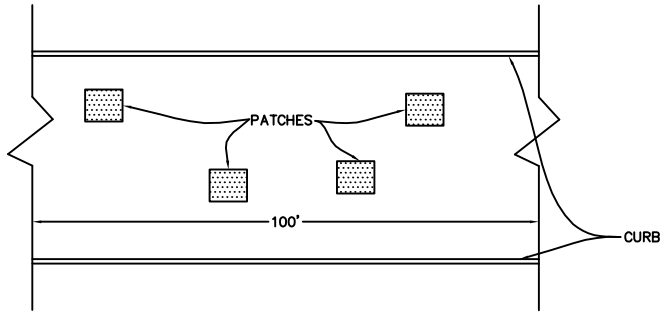

MULTIPLE CUTS SHALL BE DEFINED AS ANY CITY STREET OR ALLEY, ASPHALT OR CONCRETE THAT HAVE THE FOLLOWING CONDITIONS:

1. FOUR (4) OR MORE PATCHES PER 100 LINEAL FEET OF ROADWAY BY AN INDIVIDUAL UTILITY PER PROJECT, AND
2. AREA CUT IS GREATER THAN 64 SF IN 100 LINEAL FEET OF ROADWAY BY AN INDIVIDUAL UTILITY PER PROJECT.

MULTIPLE CUTS TO BE RESTORED AS FOLLOWS:

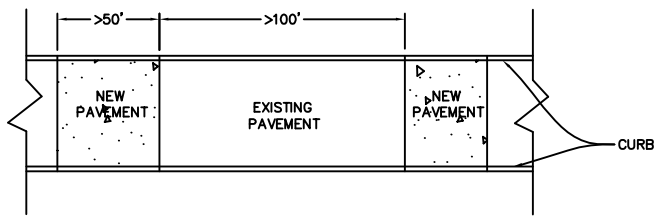

1. NEW PAVEMENT AREAS SHALL NOT HAVE GAPS OF LESS THAN 100 FEET. MINIMUM LENGTH OF NEW PAVEMENT SHALL BE 50 FEET.

METHOD FOR REPLACING MULTIPLE CUTS

NOT TO SCALE

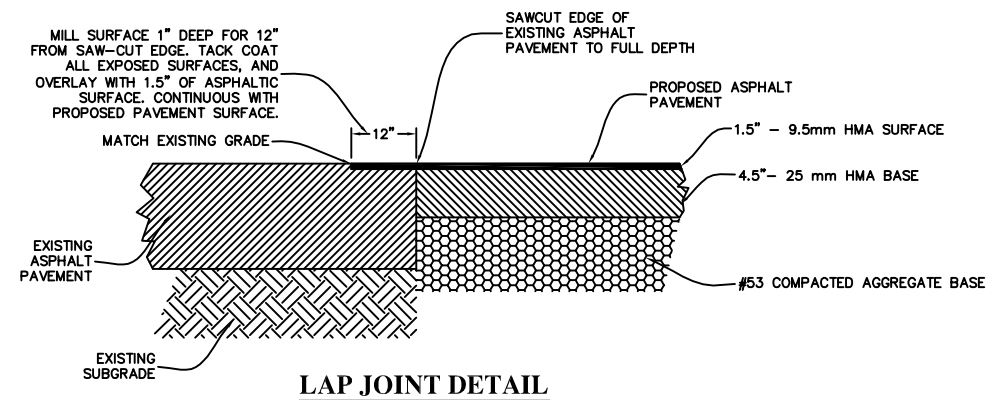

LAP JOINT DETAIL

NOT TO SCALE

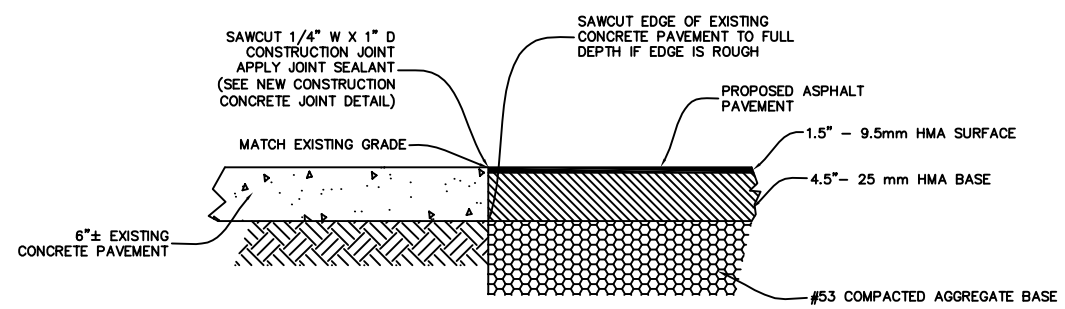

BUTT JOINT DETAIL

NOT TO SCALE

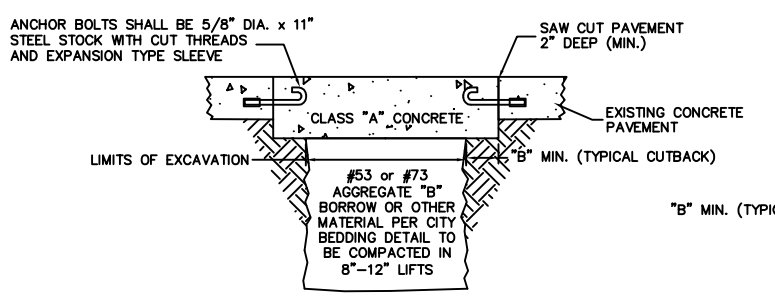

CONCRETE PAVEMENT REPAIR

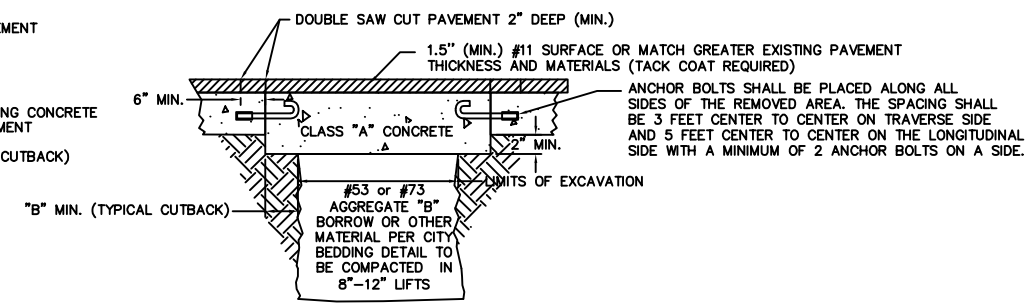

ASPHALT OVER CONCRETE

PAVEMENT REPAIR

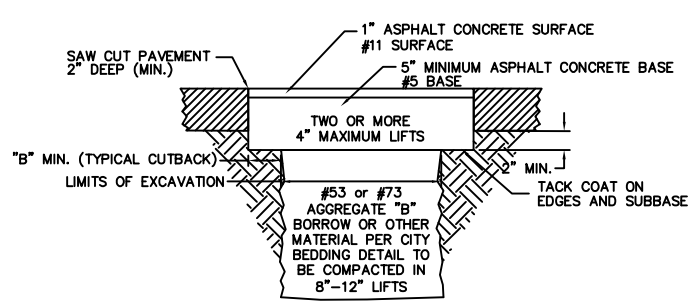

ASPHALT PAVEMENT REPAIR

CUTBACK TABLE	
CUT– BACK "B"	TRENCH WIDTH
6"	3'–0" OR LESS
9"	3'–1" TO 5'–0"
12"	5'–1" OR GREATER

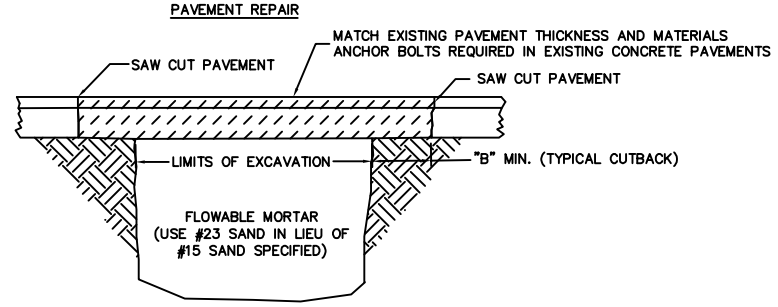

PAVEMENT REPAIR

WITH FLOWABLE MORTAR BACKFILL

(FLOWABLE MORTAR SHALL NOT BE USED WHEN TEMPERATURES ARE BELOW 38° F)

**USE OF FLOWABLE MORTAR REQUIRES PRIOR APPROVAL FROM THE CITY ENGINEER'S OFFICE

PERMANENT PAVEMENT RESTORATION

NOT TO SCALE

ALL PAVEMENT RESTORATION MATERIALS TO BE PER INDIANA DEPARTMENT OF TRANSPORTATION "STANDARD SPECIFICATIONS" 1999 EDITION.

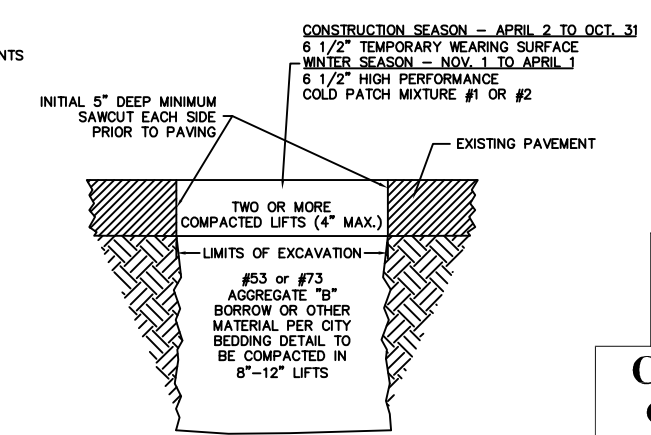

TEMPORARY ASPHALT REPAIR

NOT TO SCALE

PAVEMENT RESTORATION NOTES:

PERMANENT PAVEMENT RESTORATION:

1. PERMANENT RESTORATION SHALL COMMENCE IMMEDIATELY UPON COMPLETION OF UTILITY WORK AND BE COMPLETE WITHIN 10 WORKING DAYS UNLESS THE CITY ENGINEER'S OFFICE GRANTS A LONGER PERIOD. REQUEST FOR EXTENSION SHALL BE IN WRITTEN FORM AND ACCOMPANIED WITH A REPAIR SCHEDULE. INVENTORY OF EXISTING TEMPORARY RESTORATIONS, AND STATEMENT INDICATING THE REASON(S) FOR THE EXTENSION.
2. EXISTING PAVEMENT SAW CUTS SHALL BE IN STRAIGHT LINES AND ARE PERPENDICULAR TO THE CURB (WHERE POSSIBLE). EDGES OF BROKEN PAVEMENT SHALL BE SQUARED OFF TO PROVIDE NEAT EDGE FOR PAVING.
3. ASPHALT SHALL BE PLACED USING PROFESSIONAL MEANS TO ESTABLISH A HARD, SMOOTH, EVEN GRADED SURFACE. COMPACTION SHALL BE DONE THOROUGHLY AND UNIFORMLY BY A MACHINE ROLLER. AREAS TOO SMALL FOR MACHINE ROLLING SHALL BE COMPACTED BY HAND WITH MECHANICAL COMPACTION EQUIPMENT UPON PRIOR APPROVAL OF THE CITY. ALL COURSES SHALL BE INITIALLY ROLLED WITH THE ROLLER TRAVELING PARALLEL TO THE CENTERLINE OF THE PAVEMENT BEGINNING AT EACH EDGE AND WORKING TOWARD THE CENTER. ALL ROLLING AND TAMPING OPERATIONS SHALL BE COMPLETED PRIOR TO ASPHALT COOLING TO BELOW 180°F.
4. PRIOR TO TACK COATING SUBBASE AND EDGES, THE EXISTING SURFACE SHALL BE FREE OF IRREGULARITIES TO PROVIDE A REASONABLY SMOOTH AND UNIFORM SURFACE TO RECEIVE TREATMENT. THE EDGES OF EXISTING PAVEMENT SHALL BE CLEANED TO PERMIT ADHESION. TACK COAT SHALL NOT BE APPLIED TO WET SURFACES OR WHEN THE AIR TEMPERATURE IS BELOW 45°F. TACK COAT MAY BE ROLLED, BRUSHED OR MOPPED. ALL EXCESS TACK COAT SHALL BE SQUEEGEED FROM THE SURFACE.
5. ALL PAVEMENT RESTORATION MATERIALS TO BE PER INDOT "STANDARD SPECIFICATIONS", 1999 EDITION.

TEMPORARY PAVEMENT REPAIR:

1. EXISTING PAVEMENT INITIAL SAW CUT TO BE 5" MINIMUM DEPTH TO OBTAIN STRAIGHT LINES PERPENDICULAR FROM THE CURB EDGE AND NEAT EDGE FOR PAVING. EDGES OF BROKEN PAVEMENT SHALL BE SQUARED OFF AND TRIMMED TO NEAT STRAIGHT LINES.
2. TEMPORARY PAVEMENT MATERIAL IS TO BE 6 ½" THICK HOT MIX ASPHALT. ASPHALT COLD PATCH, BAG ASPHALT AND CRUSHED STONE ARE UNACCEPTABLE FOR USE. THE USE OF STEEL STREET PLATES MUST BE REQUESTED IN WRITTEN FORM AND ACCOMPANIED WITH A REPAIR SCHEDULE, INVENTORY OF EXISTING TEMPORARY RESTORATIONS, AND STATEMENT INDICATING THE REASON(S) FOR USE OF PLATES.
3. DURING WINTER SEASON WHEN THE PERMANENT PATCH CANNOT BE COMPLETED WITHIN 10 WORKING DAYS (NOVEMBER 1 THRU APRIL 14), IF HOT MIX ASPHALT IS NOT AVAILABLE, USE INDOT APPROVED "HIGH PERFORMANCE COLD PATCH" OR EQUAL INDOT APPROVED MATERIAL.

   HIGH PERFORMANCE COLD PATCH MIXTURE #1 (UPM), IS FOR USE IN WET AND COLD CONDITIONS AND WORKABLE AT TEMPERATURES AS LOW AS –15°F.

   HIGH PERFORMANCE COLD PATCH MIXTURE #2 (CM300), IS FOR USE IN WET AND COLD CONDITIONS AND WORKABLE AT TEMPERATURES AS LOW AS 32°F.
4. ALL MATERIALS ARE TO BE COMPACTED TO FORM A FIRM AND SMOOTH TRANSITION BETWEEN OLD AND NEW SURFACE GRADE. DO NOT APPLY HOT MIX ASPHALT ON A WET SURFACE.
5. UPON COMPLETION OF BACKFILLING, TEMPORARY PAVEMENT ON STREETS SHALL BE PLACED BY THE END OF THE WORK DAY.
6. TEMPORARY STREET RESTORATION IS INTENDED TO BE AN INTERIM MEASURE UNTIL CONDITIONS ALLOW FOR PERMANENT RESTORATION OF THE STREET. THE CITY REALIZES THAT AT TIMES, TEMPORARY RESTORATION IS NECESSARY, SUCH AS, DURING THE WINTER SEASON WHEN THE ASPHALT PLANTS ARE CLOSED AND WHEN FREEZING TEMPERATURES MAKE PERMANENT RESTORATION NOT FEASIBLE OR WHEN PERMIT WORK PRECEDES CITY STREET RECONSTRUCTION OR REHABILITATION PERMIT HOLDERS ARE TO MINIMIZE THE USE OF TEMPORARY RESTORATIONS WHEN POSSIBLE. ANY WORK UNDERTAKEN BEFORE NOVEMBER 1 SHALL BE PERMANENTLY RESTORED BEFORE THE FALL ASPHALT PLANT CLOSINGS. ONLY WORK UNDERTAKEN ON OR AFTER NOVEMBER 1 MAY BE CARRIED OVER TO PERMANENT RESTORATION IN THE FOLLOWING SPRING SEASON. ALL TEMPORARY RESTORATION PLACED DURING THE WINTER SEASON MUST BE PERMANENTLY RESTORED WITHIN FOUR (4) WEEKS OF SPRING ASPHALT PLANT OPENINGS, BUT NO LATER THAN MAY 15TH. THE CITY ENGINEER'S OFFICE MAY GRANT EXTENSIONS BEYOND MAY 15TH FOR PERMANENT RESTORATIONS WHEN REQUESTED IN WRITING AND ACCOMPANIED WITH A REPAIR SCHEDULE, INVENTORY OF EXISTING TEMPORARY RESTORATIONS, AND A STATEMENT INDICATING THE REASON(S) FOR THE EXTENSION.

SPECIAL SURFACE STREETS:

1. ANY SPECIAL SURFACES SHALL BE RESTORED IN–KIND. FOR EXAMPLE: BRICK SURFACE STREETS REQUIRE ALL PAVEMENT CUTS TO BE RESTORED WITH BRICK. COBBLESTONE SURFACE STREETS MUST BE RESTORED WITH COBBLESTONE. PERMIT HOLDER SHALL SALVAGE AS MUCH OF THE EXISTING BRINK OR COBBLESTONE AS POSSIBLE FOR REUSE IN THE RESTORATION AND SHALL SUPPLY ANY REMAINING MATERIAL REQUIRED FOR THE RESTORATION.

APPROVED BY THE WEST LAFAYETTE BOARD OF PUBLIC WORKS AND SAFETY ON JULY 5, 2005.

City of West Lafayette
City Hall, 609 West Navajo
West Lafayette, IN 47906

Pavement Repair and Restoration
Typical Sections and Notes

Date	July 2005	Sheet	5 of 12

Holey Moley	(800) 382-5544
City Engineer	(765) 775-5130
Public Works Department	(765) 775-5145
Development Department	(765) 775-5160
Fire Department	(765) 775-5175
Police Department	(765) 775-5200

Project Name	Project Sheet Number
CITY STANDARDS	of

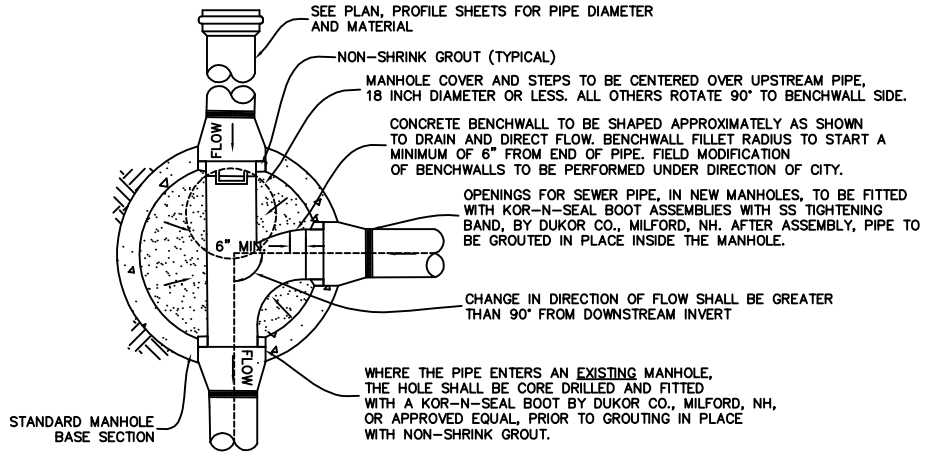

STANDARD SANITARY MANHOLE PLAN

NOT TO SCALE

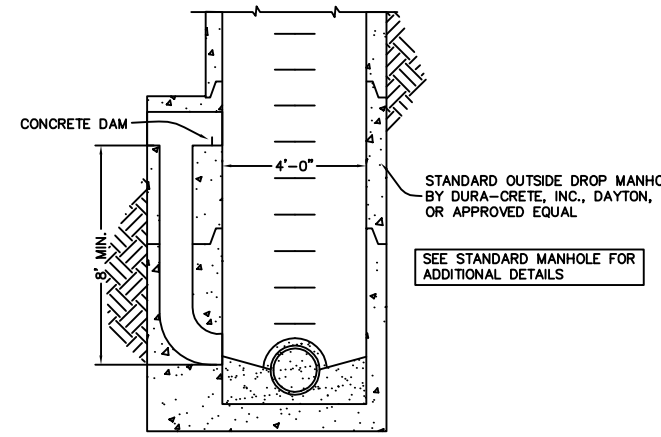

NOTE: PRIOR WRITTEN APPROVAL OF THE CITY IS REQUIRED FOR USE OF AN OUTSIDE DROP MANHOLE

PRECAST OUTSIDE DROP MANHOLE

NOT TO SCALE

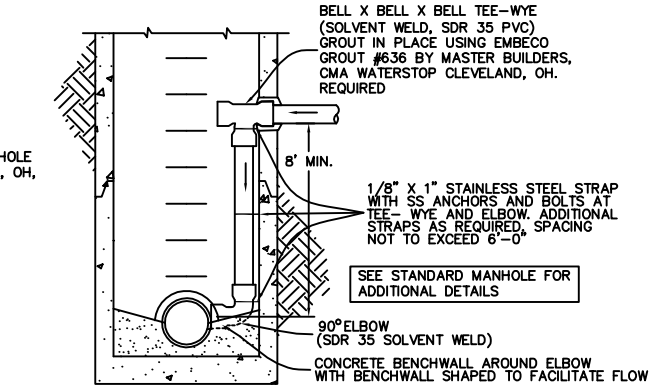

NOTE: PRIOR WRITTEN APPROVAL OF THE CITY IS REQUIRED FOR USE OF AN INSIDE DROP MANHOLE.

INSIDE DROP MANHOLE DETAIL

(EXISTING MANHOLES ONLY)
NOT TO SCALE

SANITARY SEWER NOTES:

1. SANITARY SEWERS TO BE POLYVINYL CHLORIDE (PVC) SDR 35 PIPE AND SHALL MEET OR EXCEED ASTM D-3034 OR ASTM 679 AS APPLICABLE. JOINTS SHALL BE GASKETED, BELL AND SPIGOT TYPE WITH THE BELL MADE INTEGRAL WITH THE PIPE. THE BELL SHALL BE INSTALLED IN THE UPSTREAM POSITION. SEE PLAN, PROFILE SHEETS FOR SIZES. SANITARY SEWERS TO BE SDR 26 PIPE FOR DEPTH 14' OR GREATER.
2. SANITARY SEWER LATERALS FOR HOUSE CONNECTIONS SHALL BE 6" DIAMETER PVC SDR 35 CONFORMING TO ASTM D-3034, LAID AT A MINIMUM SLOPE OF 0.62%. ENDS TO BE PLUGGED. JOINTS SHALL BE GASKETED BELL AND SPIGOT TYPE WITH THE BELL MADE INTEGRAL. THE BELL SHALL BE INSTALLED IN THE UPSTREAM POSITION. PIPE LATERALS LONGER THAN 150' REQUIRE A MANHOLE.
3. LATERAL CONNECTIONS TO AN EXISTING CLAY OR CONCRETE SEWER SHALL BE MADE WITH A BOOT-N-SADDLE WITH STAINLESS STEEL STRAPS AND APPROPRIATE RUBBER FITTING. CONNECTIONS TO AN EXISTING FLEXIBLE SEWER PIPE SHALL BE MADE WITH THE APPROPRIATE MANUFACTURED FITTINGS AND SEALED IN PLACE.
4. THE COMPLETED SANITARY SEWER SHALL BE HIGH PRESSURE WATER JET CLEANED AND SUBJECTED TO AN AIR TEST CONFORMING TO ASTM F1417-92. A DEFLECTION TEST SHALL BE PERFORMED WITH A "GO-NO-GO" MANDREL (95%) ACCORDING TO IDEM STANDARDS. CLEANING, TELEVISING AND TESTING SHALL BE PERFORMED A MINIMUM OF 45 DAYS (OR APPROVED MINIMUM TIMEFRAME) AFTER INSTALLATION AND WITNESSED BY THE CITY. ALL COSTS OF CLEANING AND TESTING ARE TO BE BORNE BY THE CONTRACTOR. CLOSED CIRCUIT TELEVISION INSPECTION OF THE SYSTEM SHALL BE REQUIRED. A COPY OF THE VIDEO (MPEG OR DVD FORMAT) SHALL BE RETAINED BY THE CITY. ALL COSTS OF TELEVISING ARE TO BE BORNE BY THE CONTRACTOR.
5. MANHOLES SHALL BE AIR TESTED IN ACCORDANCE WITH ASTM C1244-93. STANDARD TEST METHOD FOR CONCRETE SEWER MANHOLES BY THE NEGATIVE AIR PRESSURE (VACCUM) TEST.
6. 1'-6" VERTICAL SEPARATION AND 10'-0" HORIZONTAL SEPARATION TO BE MAINTAINED BETWEEN WATERMAINS HYDRANTS AND SEWERS (SANITARY AND STORM).
7. TRENCHES UNDER PAVED AREAS (EXCLUDING SIDEWALKS) SHALL BE BACKFILLED WITH GRANULAR MATERIAL PER INDIANA DEPARTMENT OF TRANSPORTATION "STANDARD SPECIFICATIONS", 1999 EDITION, SECTION 211, AND COMPACTED IN LIFTS. GRANULAR MATERIAL TO EXTEND 5 FEET BEYOND THE LIMITS OF THE PAVED AREA WITH A 1:1 SLOPE TO THE BOTTOM OF THE TRENCH.
8. CONNECTIONS TO EXISTING MANHOLES TO BE CORE DRILLED AND FITTED WITH A KOR-N-SEAL BOOT BY DUKOR CO., MILFORD, NH, PRIOR TO GROUTING IN PLACE WITH NON-SHRINK GROUT.
9. ALL SEWER LINES SHALL HAVE A 0.1 FT. DROP THROUGH THE MANHOLE. WHERE SEWER LINES CHANGE DIRECTION, THE MANHOLE INVERT ELEVATION SHALL DROP 0.25 FT. (TYPICAL) THRU THE MANHOLE.
10. SEWER PERMIT AND CITY INSPECTION REQUIRED FOR ALL CONNECTIONS TO STORM OR SANITARY SEWER SYSTEMS. SEWER PERMIT REQUIRED ON SITE DURING ANY SEWER CONSTRUCTION.
11. TOP OF MANHOLE FRAMES TO BE SET AT PROPOSED YARD OR SIDEWALK GRADE WHEN LOCATED IN FRONT YARD AREA OF LOT OR RIGHT-OF-WAY. WHEN MANHOLE IS IN A TRAVELED WAY, THE TOP OF THE LID SHALL BE FLUSH WITH THE FINAL SURFACE, AND BACKFILL SHALL BE GRANULAR TO THE SURFACE. IN ALL OTHER AREAS, THE TOP OF THE FRAME SHALL BE ONE 1'-0" ABOVE THE SURROUNDING GRADE, SLOPING AWAY FROM THE MANHOLE FOR A DISTANCE OF 6'-0" IN ALL DIRECTIONS.
12. WHERE PROPRIETARY EQUIPMENT IS SPECIFIED, "OR APPROVED EQUAL" IS IMPLIED. ALL PROPOSALS FOR SUBSTITUTION SHALL BE SUBMITTED TO THE CITY IN WRITING FOR APPROVAL.
13. MARK THE LOCATIONS OF THE SANITARY SEWER LATERAL BY STAMPING "SS" IN THE CURB. SIMILARLY, STAMP "MH" IN THE CURB TO MARK THE LOCATIONS OF MANHOLES.
14. ALL FITTINGS TO BE SDR 26 PVC.

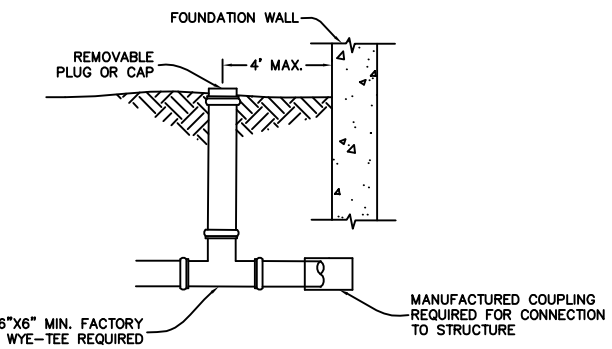

CLEAN-OUT DETAIL

NOT TO SCALE

MINIMUM DESIGN SLOPES	
SEWER DIAMETER	MIN. SLOPE IN ft/100 ft (m/100m)
8" (203 mm)	0.45
10" (254 mm)	0.33
12" (305 mm)	0.27
15" (381 mm)	0.20
18" (457mm)	0.17
24" (610 mm)	0.12
30" (762 mm)	0.10
36" (914 mm)	0.10
42" (1067 mm)	0.10
48" (1218 mm)	0.10

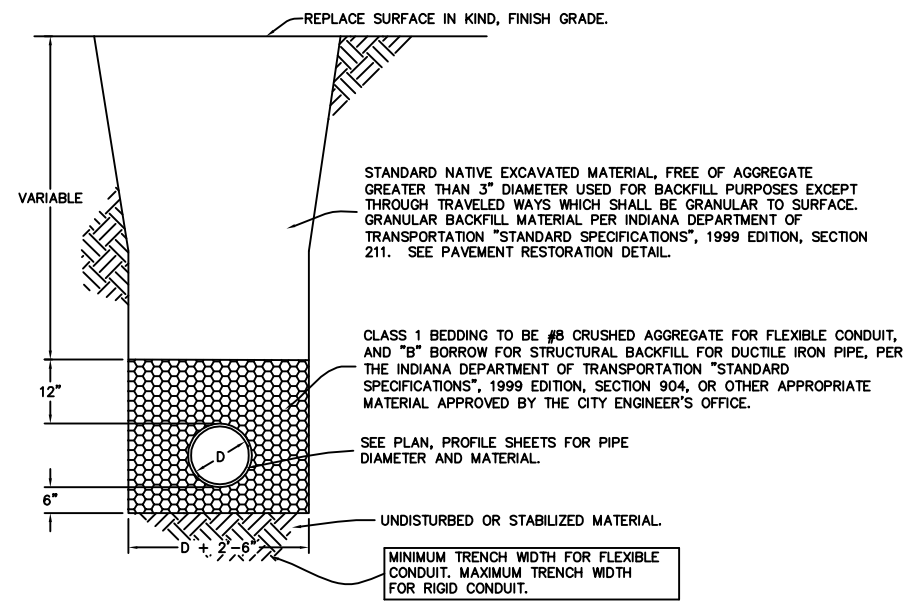

STANDARD BEDDING DETAIL

NOT TO SCALE

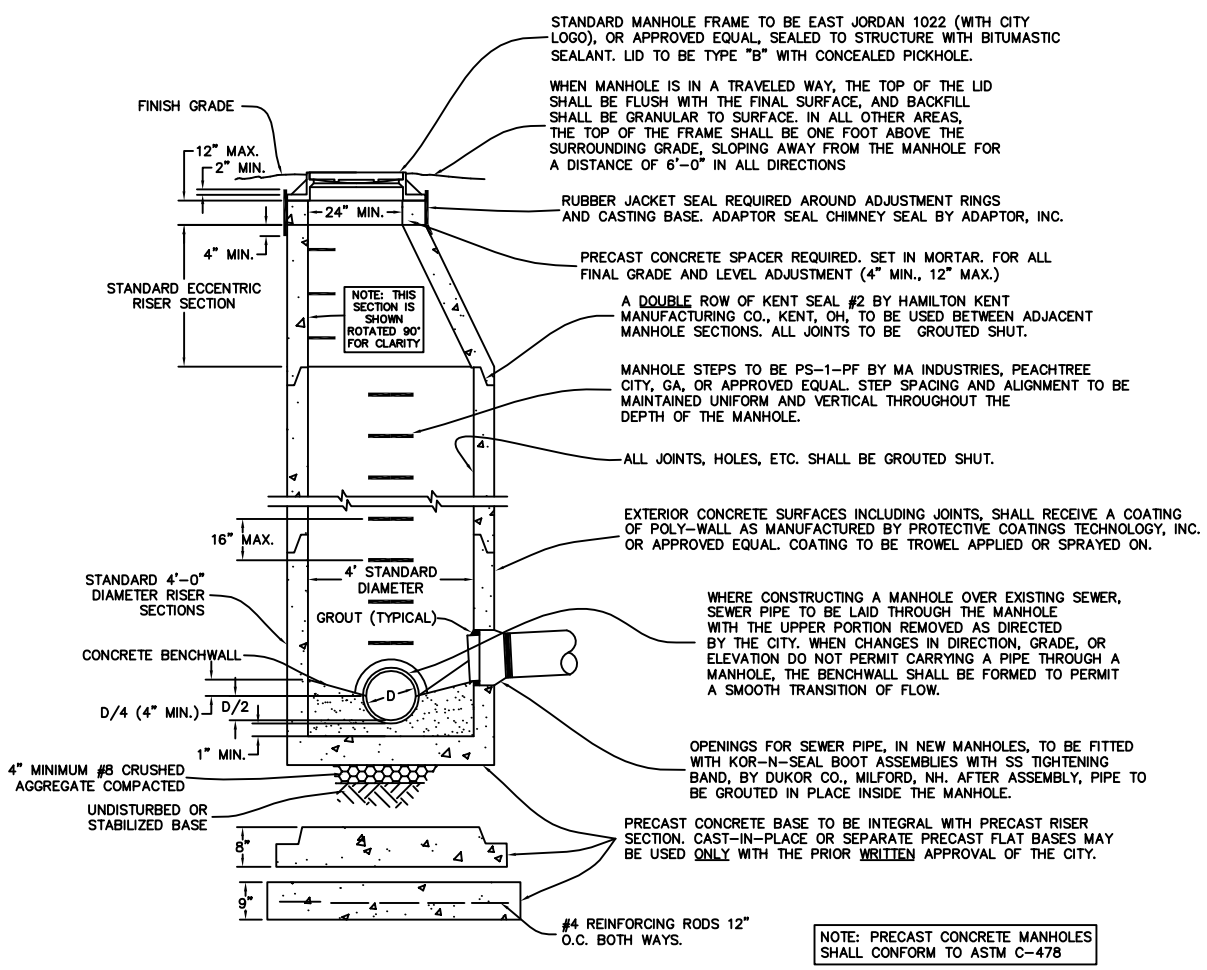

NOTE: PRECAST CONCRETE MANHOLES SHALL CONFORM TO ASTM C-478

STANDARD SANITARY MANHOLE DETAIL

NOT TO SCALE

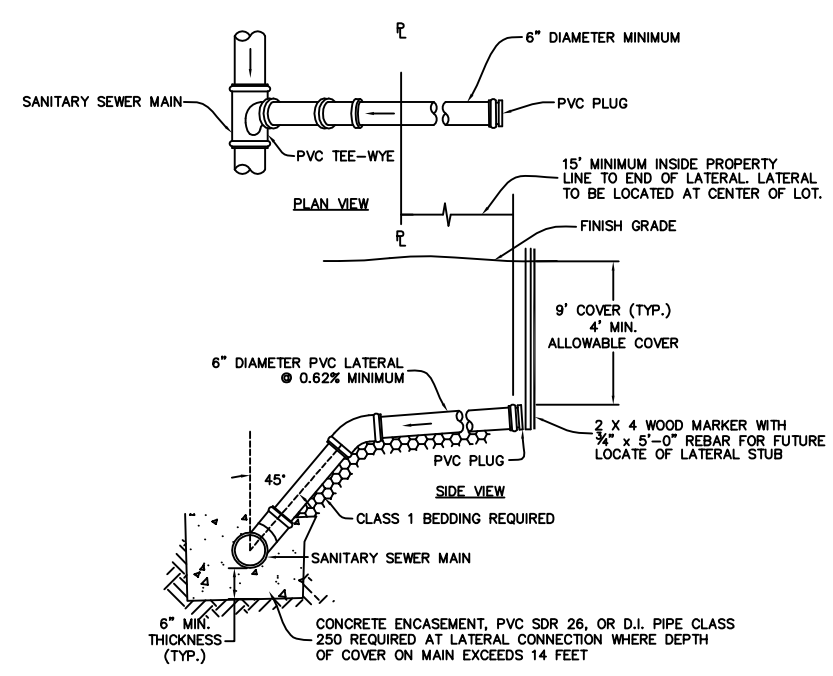

LATERAL CONNECTION DETAIL

NOT TO SCALE

TELEVISION INSPECTION CRITERIA
SANITARY SEWERS

SEWERS ARE TO BE "FLOODED" BEFORE TELEVISION INSPECTION. THE IMAGE SHALL BE CLEAR ENOUGH TO ENABLE THE CITY REPRESENTATIVE AND OTHERS VIEWING THE MONITOR TO EASILY EVALUATE THE INTERIOR CONDITION OF THE PIPE.

ALL UNACCEPTABLE CONDITIONS FOUND DURING TELEVISION INSPECTION MUST BE CORRECTED BY THE CONTRACTOR AND RETELEVISED.

UNACCEPTABLE CONDITIONS ARE CONDITIONS THAT ADVERSELY EFFECT THE ABILITY OF THE SYSTEM TO FUNCTION AS DESIGNED OR TO BE PROPERLY MAINTAINED AND MAY INCLUDE, BUT ARE NOT LIMITED TO, THE FOLLOWING:

A. PROTRUDING TAPS
B. CRACKED OR FAULTY PIPE
C. MISALIGNED OR DEFORMED PIPE
D. DEBRIS IN LINE
E. INFILTRATION/EXFILTRATION
F. EXCESSIVE GAPS AT JOINTS
G. BELLIES OR SAGS WITH A DEPTH GREATER THAN OR EQUAL TO 10% (OR A MAXIMUM OF 1½") OF PIPE DIAMETER AND/OR A LENGTH GREATER THAN 25 FEET.
H. EXPOSED GASKETS

APPROVED BY THE WEST LAFAYETTE BOARD OF PUBLIC WORKS AND SAFETY ON JULY 5, 2005.

City of West Lafayette
City Hall, 609 West Navajo
West Lafayette, IN 47906

Sanitary Sewer

Typical Details and Notes

Date	July 2005	Sheet	6 of 12

Holey Moley	(800) 382-5544
City Engineer	(765) 775-5130
Public Works Department	(765) 775-5145
Development Department	(765) 775-5160
Fire Department	(765) 775-5175
Police Department	(765) 775-5200

Project Name	Project Sheet Number
CITY STANDARDS	of

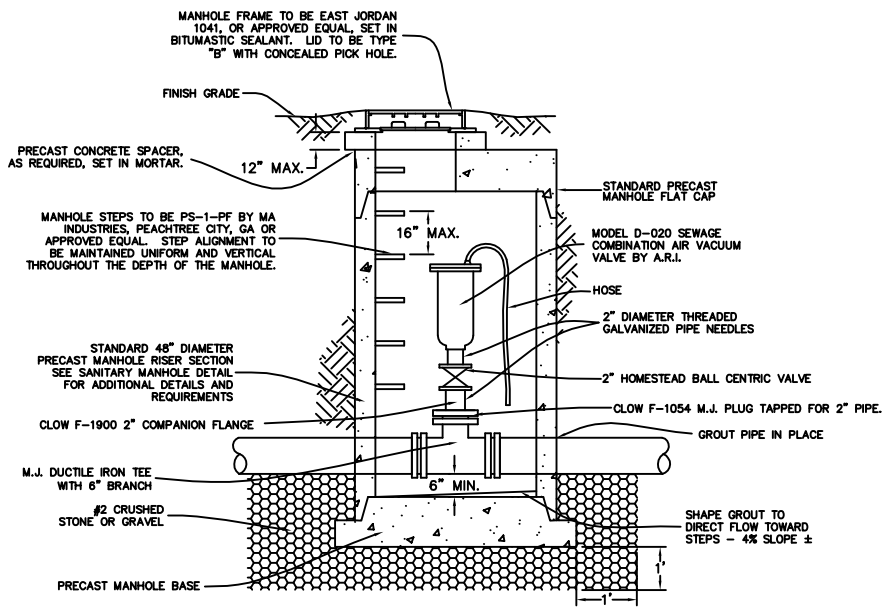

NOTE: PRECAST CONCRETE MANHOLES SHALL CONFORM TO ASTM C-478

SEWAGE FORCEMAIN AIR RELEASE MANHOLE

NOT TO SCALE

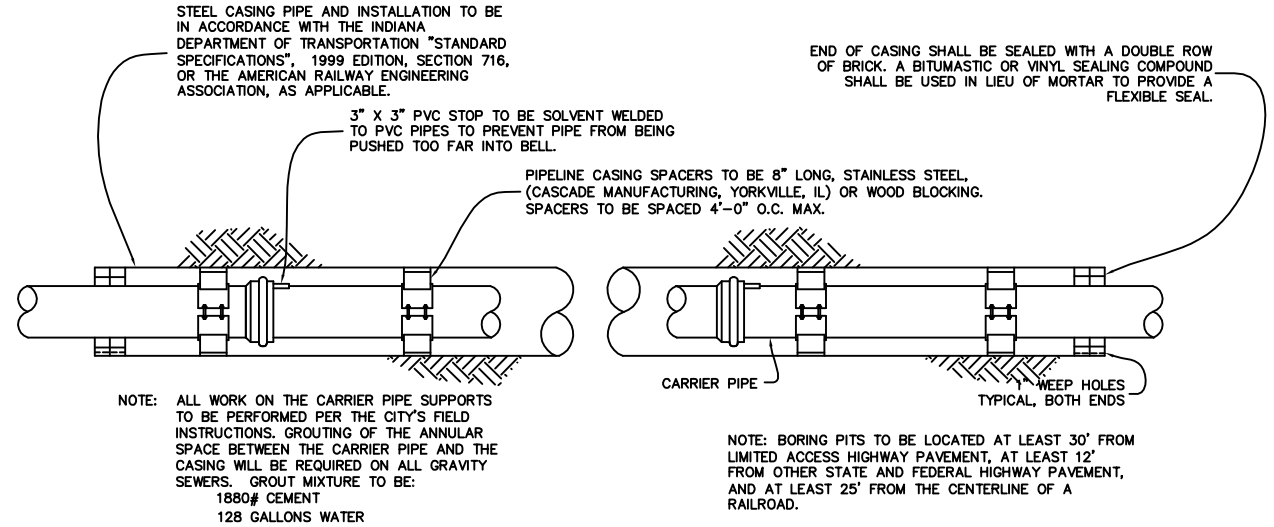

NOTE: ALL WORK ON THE CARRIER PIPE SUPPORTS TO BE PERFORMED PER THE CITY'S FIELD INSTRUCTIONS. GROUTING OF THE ANNULAR SPACE BETWEEN THE CARRIER PIPE AND THE CASING WILL BE REQUIRED ON ALL GRAVITY SEWERS. GROUT MIXTURE TO BE:

- 1880# CEMENT
- 128 GALLONS WATER
- 4 GALLONS OF 886 SUPER PLASTIZER BY W.R. GRACE, INC.
- 5# GROUT SOLIDIFIER

NOTE: BORING PITS TO BE LOCATED AT LEAST 30' FROM LIMITED ACCESS HIGHWAY PAVEMENT, AT LEAST 12' FROM OTHER STATE AND FEDERAL HIGHWAY PAVEMENT, AND AT LEAST 25' FROM THE CENTERLINE OF A RAILROAD.

PIPE CASING DETAIL

NOT TO SCALE

THE CASING PIPE SHALL BE WELDED STEEL PIPE, NEW AND UNUSED MATERIAL, IN ACCORDANCE WITH CURRENT ASTM SPECIFICATION A-139, GRADE B FOR "ELECTRIC FUSION OF WELDED STEEL PIPE", WITH A MINIMUM YIELD OF 35,000 PSI.

THE INSIDE DIAMETER OF THE CASING PIPE SHALL BE AT LEAST SIX (6) INCHES GREATER THAN THE LARGEST DIAMETER OF THE PIPELINE JOINT.

THE MINIMUM WALL THICKNESS OF THE CASING PIPE SHALL BE AS LISTED IN THE FOLLOWING TABLE OR AS SHOWN ON THE APPLICABLE DRAWINGS:

DIAMETER OF CASING	WALL THICKNESS (IN.) UNDER HIGHWAY	UNDER RAILROAD
16" OR SMALLER	0.250	0.312
18"	0.250	0.312
20"	0.312	0.344
24"	0.375	0.438
30" THROUGH 42"	0.500	0.563
48"	0.625	0.625
54"	0.875	0.875
66"	1.00	1.00

CASING SPECIFICATION

NOT TO SCALE

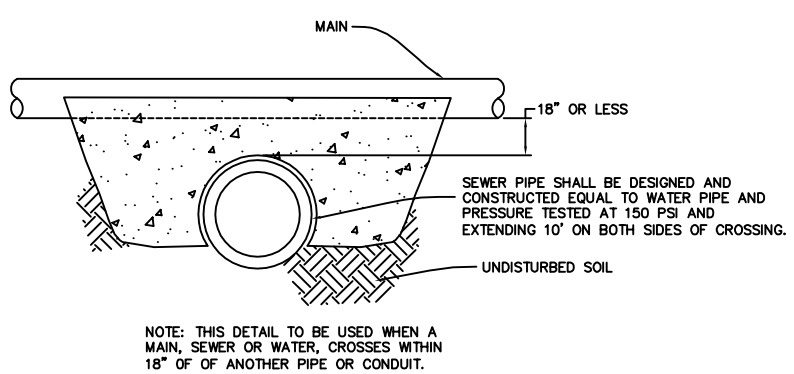

NOTE: THIS DETAIL TO BE USED WHEN A MAIN, SEWER OR WATER, CROSSES WITHIN 18" OF OF ANOTHER PIPE OR CONDUIT.

PIPE CROSSING DETAIL

NOT TO SCALE

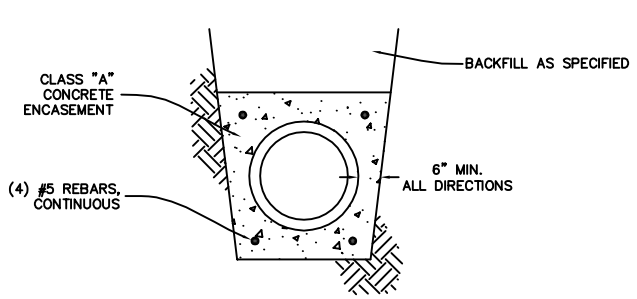

PIPE ENCASEMENT DETAIL

NOT TO SCALE

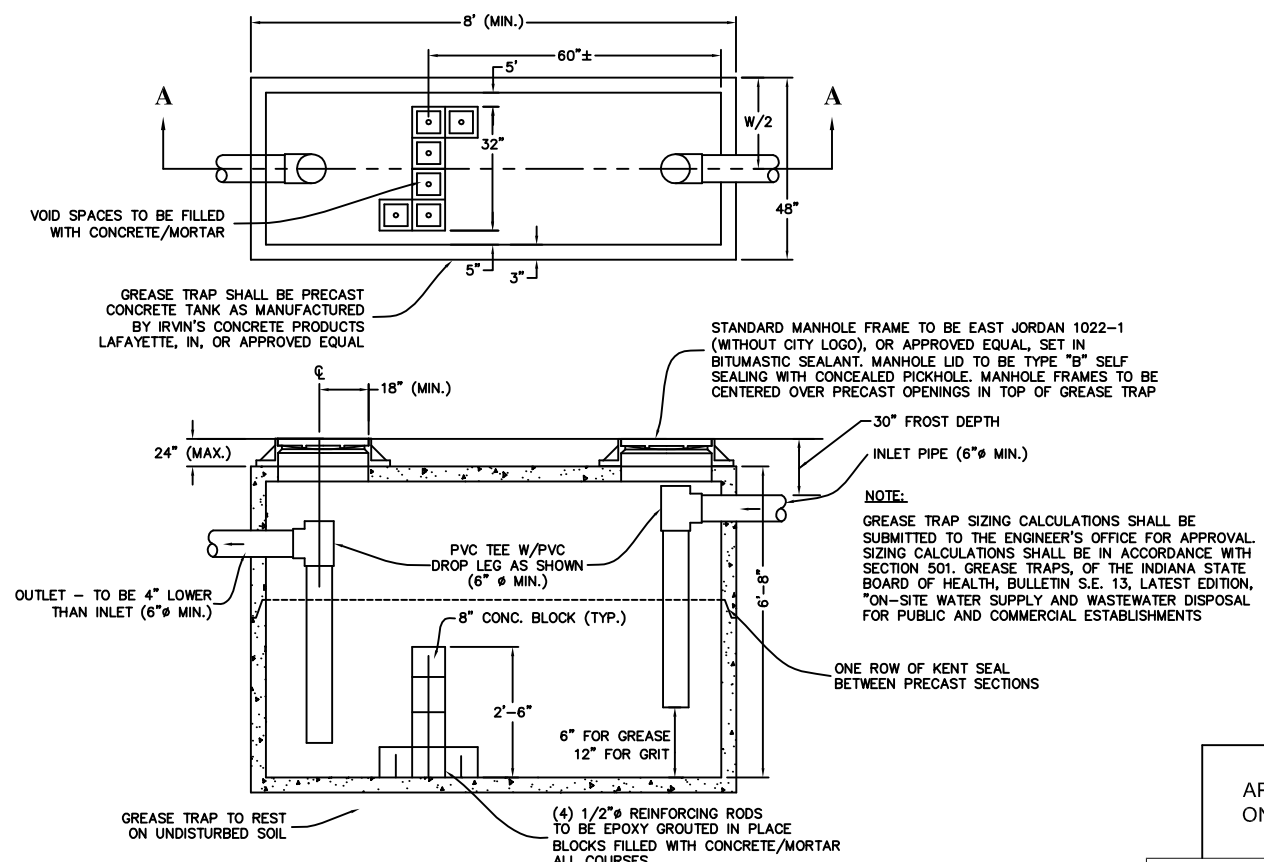

NOTE:

GREASE TRAP SIZING CALCULATIONS SHALL BE SUBMITTED TO THE ENGINEER'S OFFICE FOR APPROVAL. SIZING CALCULATIONS SHALL BE IN ACCORDANCE WITH SECTION 501. GREASE TRAPS, OF THE INDIANA STATE BOARD OF HEALTH, BULLETIN S.E. 13, LATEST EDITION, "ON-SITE WATER SUPPLY AND WASTEWATER DISPOSAL FOR PUBLIC AND COMMERCIAL ESTABLISHMENTS

GREASE/GRIT TRAP (COMMERCIAL)

NOT TO SCALE

GENERAL NOTES:

1. WHENEVER PROPRIETARY EQUIPMENT IS SPECIFIED, "OR APPROVED EQUAL" IS IMPLIED.
2. ALL PROPOSALS SHALL BE SUBMITTED TO THE CITY IN WRITING FOR THEIR APPROVAL.
3. GREASE TRAP SIZE SHALL BE 1,000 GAL. MINIMUM.

APPROVED BY THE WEST LAFAYETTE BOARD OF PUBLIC WORKS AND SAFETY ON JULY 5, 2005.

City of West Lafayette
City Hall, 609 West Navajo
West Lafayette, IN 47906

Sanitary Sewer and Misc. Utility

Typical Details and Notes

Date	July 2005	Sheet	7 of 12

Holey Moley	(800) 382-5544
City Engineer	(765) 775-5130
Public Works Department	(765) 775-5145
Development Department	(765) 775-5160
Fire Department	(765) 775-5175
Police Department	(765) 775-5200

Project Name	Project Sheet Number
CITY STANDARDS	of

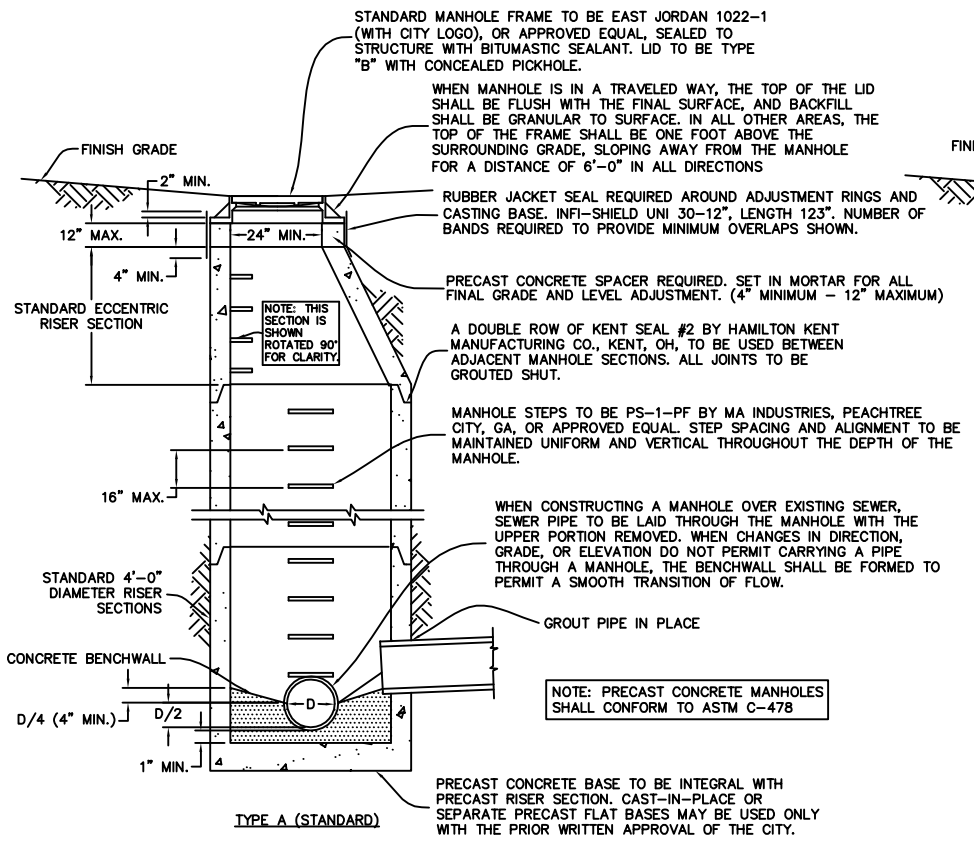

TYPE A (STANDARD)

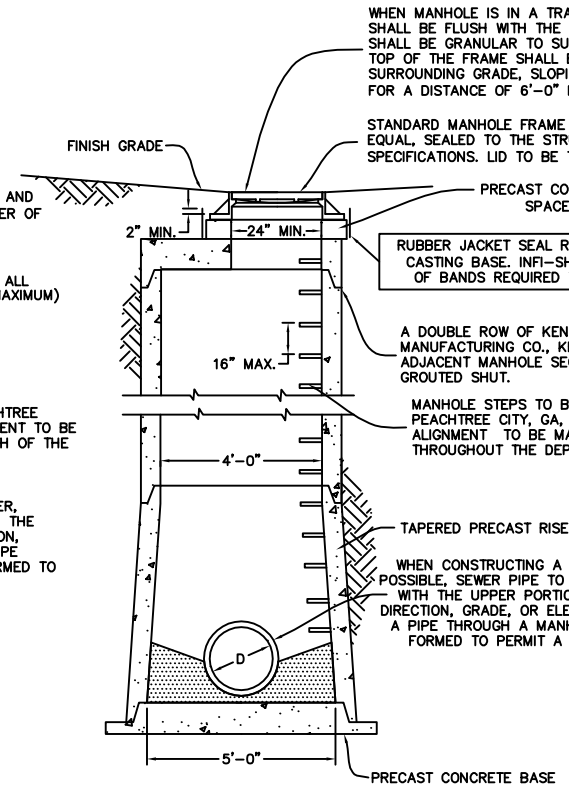

TYPE B

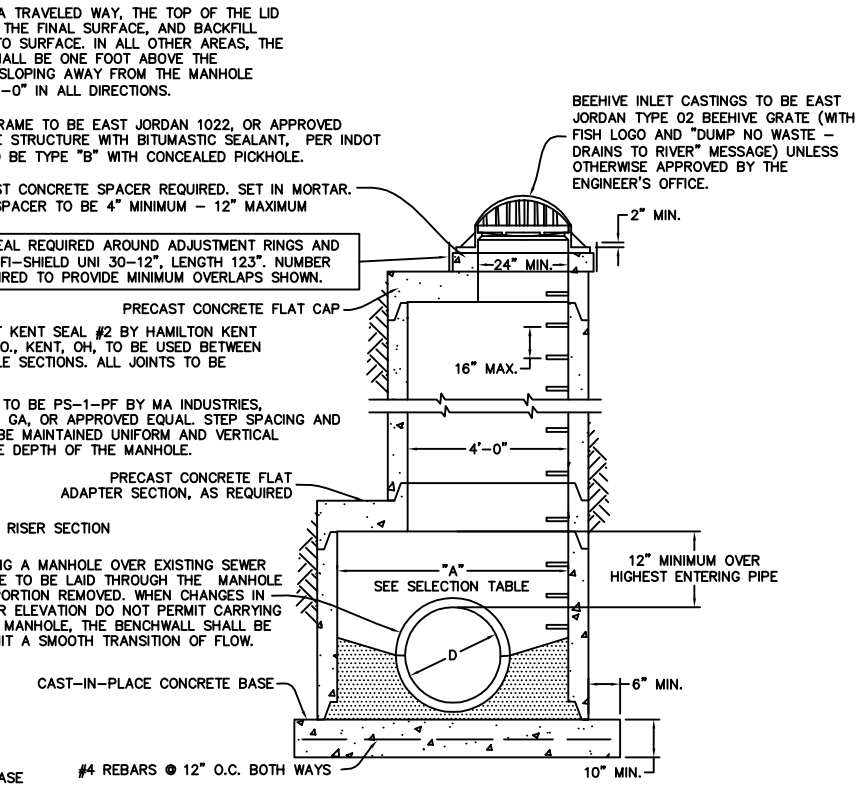

TYPE C, D, E, F, G, H, J, K, AND L

STORM SEWER MANHOLE SECTIONS

NOT TO SCALE

MANHOLE SELECTION TABLE - CIRCULAR

TYPE	PIPE DIAMETER "D"	RISER DIAMETER "A"	MAXIMUM PIPE SIZE FOR MAIN LINE	MAXIMUM PIPE SIZE 90° TO MAIN LINE
A	UP TO 24"	48"	24"	24"
B	24"-36"	--	36"	30"
C	24"-33"	60"	36"	30"
D	36"-48"	72"	48"	36"
E	48"-54"	96"	54"	48"
F	54"-72"	102"	72"	66"
G	72"-84"	108"	84"	72"

MANHOLE SELECTION TABLE RECTANGULAR

TYPE	PIPE DIAMETER "D"	WIDTH "A"
A	UP TO 24"	48"
H	27"-42"	60"
J	28"-60"	78"
K	66"-84"	108"
L	90"-108"	132"

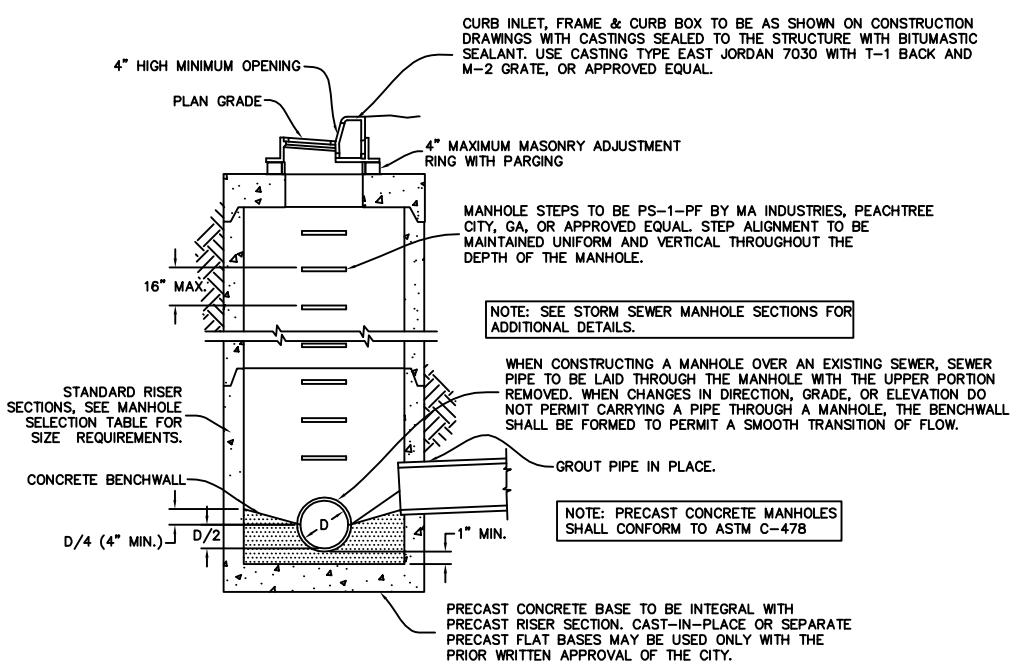

STORM SEWER MANHOLE - INLET

NOT TO SCALE

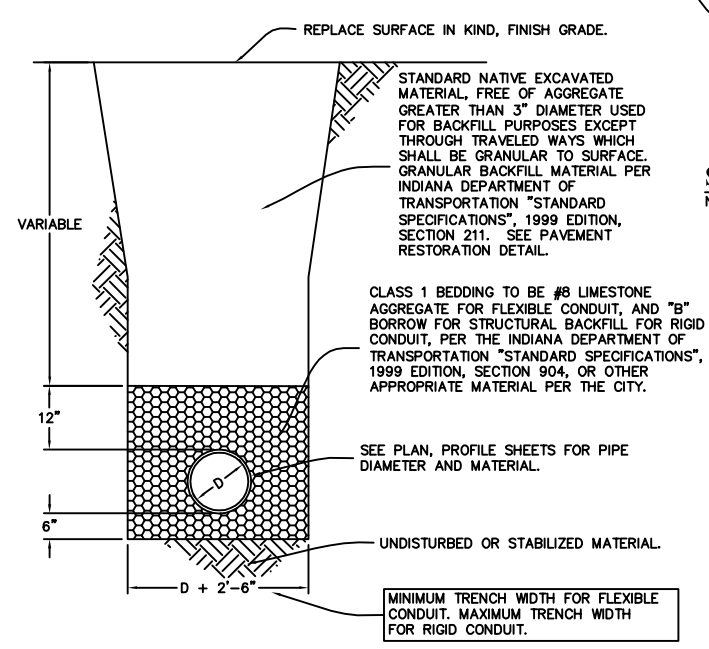

STANDARD BEDDING DETAIL

NOT TO SCALE

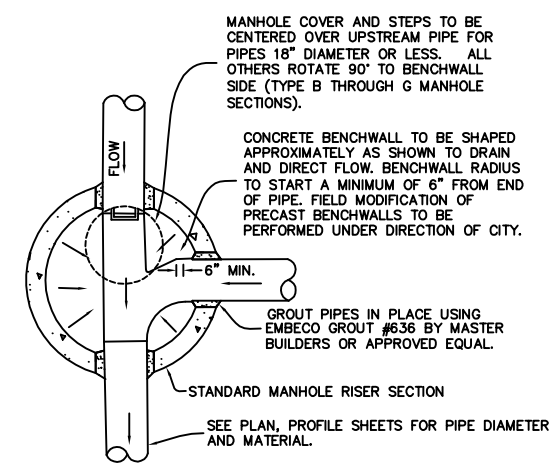

STORM SEWER MANHOLE PLAN

NOT TO SCALE

STORM SEWER NOTES:

1. STORM SEWER PIPE AND APPURTENANCES SHALL CONFORM TO CITY OF WEST LAFAYETTE SPECIFICATIONS FOR DESIGN AND QUALITY OF CONSTRUCTION, AND CITY OF WEST LAFAYETTE ORDINANCE NO. 08-05, "THE WEST LAFAYETTE STORMWATER CODE", FOR DESIGN AND MATERIALS.
2. CONSTRUCTION PROCEDURES AND MATERIALS SHALL COMPLY WITH APPLICABLE SECTIONS OF THE INDIANA DEPARTMENT OF TRANSPORTATION "STANDARD SPECIFICATIONS", 1999 EDITION.
3. PIPE USED IN STORM SEWER CONSTRUCTION SHALL BE CONCRETE PIPE (ASTM C-76) WITH A MINIMUM DIMAETER OF 12". OTHER PIPE AND FITTINGS NOT SPECIFIED HEREIN MAY BE USED ONLY WHEN SPECIFICALLY AUTHORIZED BY THE CITY. PIPE JOINTS SHALL BE FLEXIBLE AND WATER TIGHT AND SHALL CONFORM TO THE REQUIREMENTS OF SECTIONS 906.04, 906.05 (MATERIALS) OF THE INDIANA DEPARTMENT OF TRANSPORTATION "STANDARD SPECIFICATIONS", 1999 EDITION.
4. ALL STORM SEWERS SHALL BE HIGH PRESSURE WATER JET CLEANED. MAINLINE STORM SEWERS (MANHOLE TO MANHOLE) SHALL BE TELEVISED. LATERAL STORM SEWERS (MANHOLE TO INLET, INLET TO INLET) IN EXCESS OF 20 FT. SHALL ALSO BE TELEVISED. MAINLINE STORM SEWERS AND LATERAL STORM SEWERS THAT ARE 36" DIAMETER OR LESS SHALL BE SUBJECTED TO A DEFLECTION TEST USING A "GO-NO-GO" MANDREL (90% DIAMETER) WHEN CONSTRUCTED USING FLEXIBLE PIPE CONDUIT MATERIALS. MAINLINE STORM SEWERS AND LATERAL STORM SEWERS THAT ARE GREATER THAN 36" DIAMETER REQUIRE THIRD PARTY TESTING AND CERTIFICATION (DAILY) OF THE BEDDING INSTALLATION WHEN CONSTRUCTED USING FLEXIBLE PIPE CONDUIT MATERIAL. CLEANING, TESTING AND TELEVISING SHALL BE PERFORMED A MINIMUM OF 45 DAYS (OR APPROVED MINIMUM TIMEFRAME) AFTER INSTALLATION, AND SHALL BE WITNESSED BY THE CITY. ALL COSTS OF CLEANING, TESTING AND TELEVISING ARE TO BE BORNE BY THE CONTRACTOR. A COPY OF THE VIDEO (MPEG OR DVD FORMAT) SHALL BE RETAINED BY THE CITY.
5. TRENCHES UNDER PAVED AREAS (EXCLUDING SIDEWALKS) SHALL BE BACKFILLED WITH GRANULAR MATERIAL PER INDIANA DEPARTMENT OF TRANSPORTATION "STANDARD SPECIFICATIONS", 1999 EDITION, SECTION 211, AND COMPACTED IN LIFTS. GRANULAR MATERIAL TO EXTEND FIVE FEET BEYOND THE LIMITS OF THE PAVED AREA WITH A 1:1 SLOPE TO THE BOTTOM OF THE TRENCH. FLOWABLE MORTAR PER SECTION 213 OF INDIANA DEPARTMENT OF TRANSPORTATION "STANDARD SPECIFICATIONS" 1999 EDITION, MAY BE USED IN LIEU OF GRANULAR MATERIAL.
6. CONFIGURATION OF INLETS IN PRIVATE PARKING OR DRIVING AREAS MAY BE VARIED TO ACCOMMODATE THE DIMENSIONS OF THE CASTINGS. PRIOR WRITTEN APPROVAL OF THE CITY IS REQUIRED.
7. 1'-6" VERTICAL SEPARATION AND 10'-0" HORIZONTAL SEPARATION TO BE MAINTAINED BETWEEN WATERMAINS, HYDRANTS AND SEWERS (SANITARY AND STORM).
8. SEWER PERMIT AND CITY INSPECTION REQUIRED FOR ALL CONNECTIONS TO STORM OR SANITARY SEWER SYSTEMS. SEWER PERMIT REQUIRED ON SITE DURING ANY SEWER CONSTRUCTION.
9. ALL TAPS TO CONCRETE PIPE SHALL BE MADE WITH BOOT AND SADDLE CONNECTORS.
10. ALL INLETS ARE TO BE DEPRESSED 0.1 FT. BELOW PLAN GRADE.
11. ALL SEWER LINES SHALL HAVE 0.1 FT. DROP THROUGH MANHOLES.
12. CASTINGS SHALL BE CENTERED ON OPENING IN STRUCTURES.
13. MINIMUM 4" OPENING REQUIRED ON BACK OF CURB INLET CASTING.
14. TOP OF MANHOLE FRAMES TO BE SET AT PROPOSED YARD OR SIDEWALK GRADE WHEN LOCATED IN FRONT YARD AREA OF LOT OR RIGHT-OF-WAY.
15. BICYCLE SAFE GRATES REQUIRED IN PAVED AREAS, EXCLUDING PAVED FLOWLINES IN SWALES OR DETENTION AREAS.
16. IF ANY EXISTING FIELD TILE SYSTEMS ARE ENCOUNTERED DURING THE CONSTRUCTION PROCESS, THE CONTRACTOR SHALL BE RESPONSIBLE FOR RECONSTRUCTING THE TILE TO ITS ORIGINAL CONDITIONS OR CONNECT IT INTO THE PROPOSED STORM DRAINAGE SYSTEM.
17. WHENEVER PROPRIETARY EQUIPMENT IS SPECIFIED, "OR APPROVED EQUAL" IS IMPLIED, ALL PROPOSALS FOR SUBSTITUTION SHALL BE SUBMITTED TO THE CITY IN WRITING FOR APPROVAL.

TELEVISION INSPECTION CRITERIA - STORM SEWERS

SEWERS ARE TO BE "FLOODED" BEFORE TELEVISION INSPECTION. THE IMAGE SHALL BE CLEAR ENOUGH TO ENABLE THE CITY REPRESENTATIVE AND OTHERS VIEWING THE MONITOR TO EASILY EVALUATE THE INTERIOR CONDITION OF THE PIPE.

ALL UNACCEPTABLE CONDITIONS FOUND DURING TELEVISION INSPECTION MUST BE CORRECTED BY THE CONTRACTOR AND RETELEVISED.

UNACCEPTABLE CONDITIONS ARE CONDITIONS THAT ADVERSELY EFFECT THE ABILITY OF THE SYSTEM TO FUNCTION AS DESIGNED OR TO BE PROPERLY MAINTAINED AND MAY INCLUDE, BUT ARE NOT LIMITED TO, THE FOLLOWING:

A. PROTRUDING TAPS
B. CRACKED OR FAULTY PIPE
C. MISALIGNED OR DEFORMED PIPE
D. DEBRIS IN LINE
E. INFILTRATION/EXFILTRATION
F. EXCESSIVE GAPS AT JOINTS
G. BELLIES OR SAGS WITH A DEPTH 10% OF PIPE DIAMETER (OR A MAXIMUM OF 3") OR GREATER AND/OR A LENGTH GREATER THAN 25 FEET

APPROVED BY THE WEST LAFAYETTE BOARD OF PUBLIC WORKS AND SAFETY ON JULY 5, 2005.

City of West Lafayette
City Hall, 609 West Navajo
West Lafayette, IN 47906

Holey Moley	(800) 382-5544
City Engineer	(765) 775-5130
Public Works Department	(765) 775-5145
Development Department	(765) 775-5160
Fire Department	(765) 775-5175
Police Department	(765) 775-5200

Storm Sewer

Typical Details and Notes

Date July 2005	Sheet 8 of 12
Project Name CITY STANDARDS	Project Sheet Number of

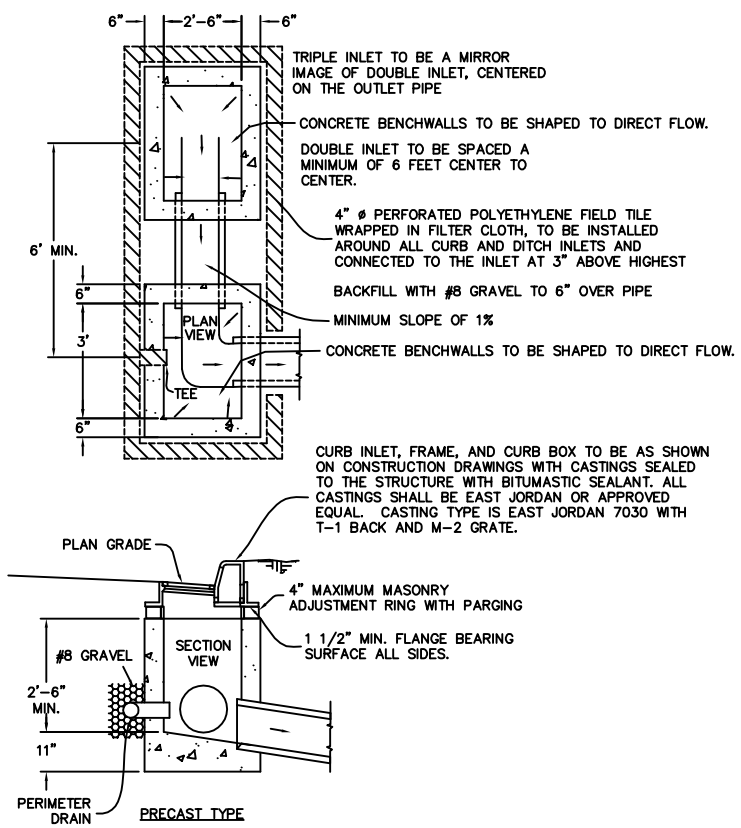

CURB INLETS

NOT TO SCALE

NOTE: PRIOR WRITTEN APPROVAL OF ENGINEER REQUIRED FOR USE OF CAST-IN-PLACE OR MASONRY STRUCTURES.

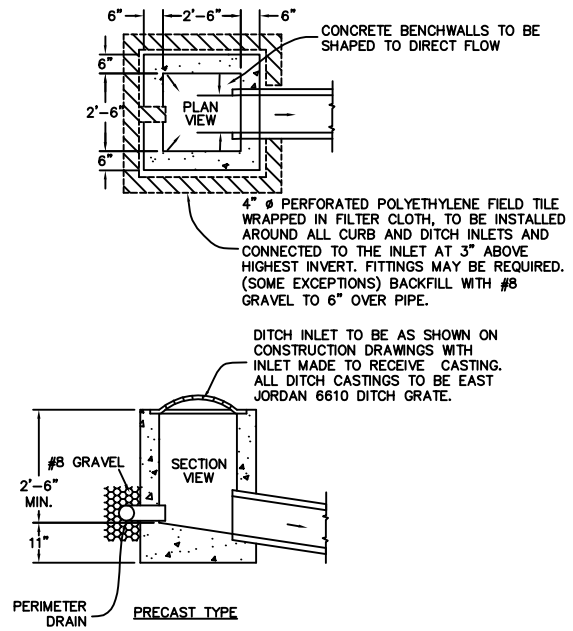

DITCH INLETS

NOT TO SCALE

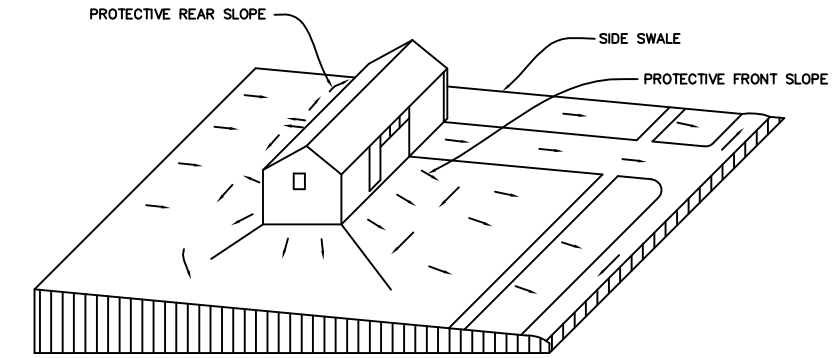

GRADING METHOD FOR LOT WHERE SLOPE IS FROM REAR TO FRONT LOT. DRAINAGE SWALES ARE LOCATED AT REAR AND SIDES OF DWELLING.

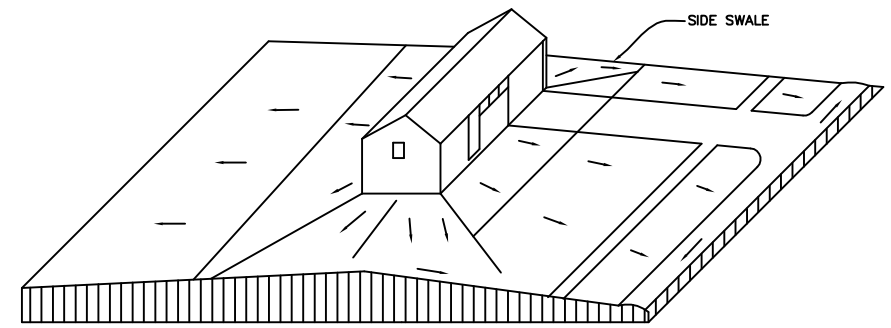

GRADING METHOD FOR LOT WHERE DWELLING IS LOCATED ON A RIDGE. DRAINAGE SWALES ARE LOCATED AT SIDE YARDS IN THE AREA OF POSITIVE SLOPES.

LOT DRAINAGE DETAIL (TYPICAL)

NOT TO SCALE

EROSION CONTROL SEEDING RECOMMENDATIONS:

THIS TABLE PROVIDES SEVERAL SEEDING OPTIONS. ADDITIONAL SEED SPECIES AND MIXTURES ARE AVAILABLE COMMERCIALLY. WHEN SELECTING A MIXTURE, CONSIDER SITE CONDITIONS, INCLUDING SOIL PROPERTIES (EX. SOIL PH AND DRAINAGE), SLOPE ASPECT AND THE TOLERANCE OF EACH SPECIES TO SHADE AND DROUGHT.

SEED SPECIES AND MIXTURES	RATE PER ACRE	OPTIMUM SOIL PH
OPEN AND DISTURBED AREAS (REMAINING IDLE FOR MORE THAN 1 YEAR)		
1. PERENNIAL RYEGRASS	35–50 LBS.	5.6 TO 7.0
+ WHITE OR LADINO CLOVER	1–2 LBS.	
2. KENTUCKY BLUEGRASS	20 LBS.	5.5 TO 7.5
+ SMOOTH BROMEGRASS	10 LBS.	
+ SWITCHGRASS	3 LBS.	
+ TIMOTHY	4 LBS.	
+ PERENNIAL RYEGRASS	10 LBS.	
+ WHITE OR LADINO CLOVER	1–2 LBS.	
3. PERENNIAL RYEGRASS	15–30 LBS.	5.6 TO 7.0
+ TALL FESCUE	15–30 LBS.	
4. TALL FESCUE	35–50 LBS.	5.5 TO 7.5
+WHITE OR LADINO CLOVER	1–2 LBS.	

FOR BEST RESULTS: (A) LEGUME SEED SHOULD BE INNOCULATED; (B) SEEDING MIXTURES CONTAINING LEGUMES SHOULD PREFERABLY BE SPRING-SEEDED ALTHOUGH THE GRASS MAY BE FALL-SEEDED AND THE LEGUME FROST-SEEDED (PRACTICE 3.13); AND (C) IF LEGUMES ARE FALL-SEEDED, DO SO EARLY IN FALL.

FERTILIZE:
ACCORDING TO SOIL TEST OR USE 600 LBS./ACRE OF 12–12–12 ANALYSIS, OR EQUIVALENT, FERTILIZER.

MULCH:
MULCH SHALL BE STRAW OR HAY. MATERIAL SHOULD BE DRY, UNCHOPPED FREE OF UNDESIRABLE SEEDS AND SPREAD BY HAND OR MACHINE. WOOD FIBER OR CELLULOSE MAY BE USED AND APPLIED WITH A HYDROMULCHER AND USE OF A TACKING AGENT.

STEEP BANKS AND CUTS, LOW MAINTENANCE AREAS (NOT MOWED), CHANNELS, AND AREAS OF CONCENTRATED FLOW REQUIRE ALTERNATE SEEDING AND MULCH ANCHORING METHODS. REFER TO INDIANA HANDBOOK FOR EROSION CONTROL IN DEVELOPING AREAS.

GENERAL NOTES:

1. WHENEVER PROPRIETARY EQUIPMENT IS SPECIFIED, "OR APPROVED EQUAL" IS IMPLIED. ALL PROPOSALS FOR SUBSTITUTION SHALL BE SUBMITTED TO THE CITY IN WRITING FOR THEIR APPROVAL.
2. PRIOR WRITTEN APPROVAL MUST BE OBTAINED FROM THE CITY ENGINEER FOR USE OF CAST IN PLACE OR MASONRY STRUCTURES.

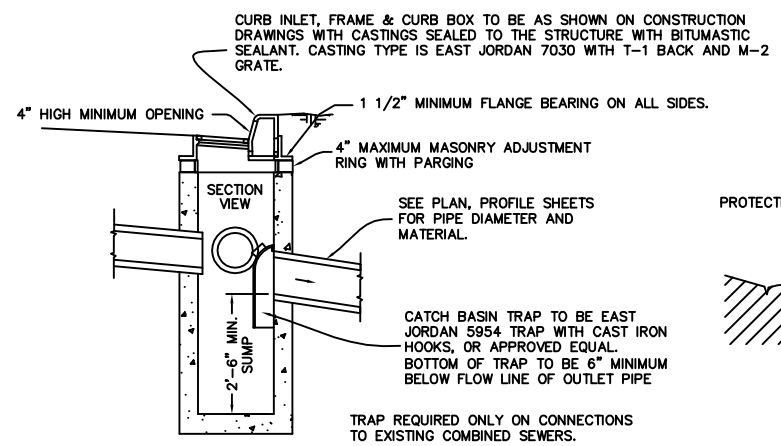

CATCH BASIN

NOT TO SCALE

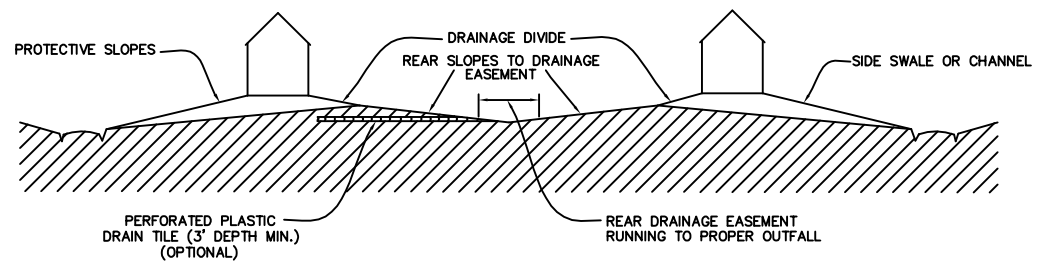

BACK TO BACK LOT SECTION DETAIL (TYPICAL)

NOT TO SCALE

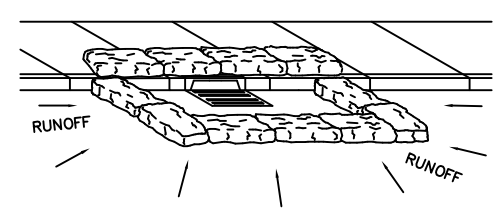

FOR INLETS THAT ARE IN LOW POINTS

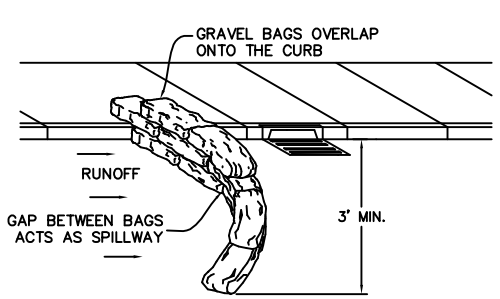

FOR INLETS THAT ARE ON SLOPING SITES OR CONTINUOUS GRADES

NOTE: GRAVEL BAGS ARE HALF FULL WITH ROCK LARGER THAN THE INLET GRATE AND PACKED CLOSE TOGETHER TO ELIMINATE GAPS. IF BAG DETERIORATES OR IS DAMAGED, REBAG OLD BAG WITH CONTENTS INTO A NEW BAG.

GRAVEL FILTER BAGS CURB INLET PROTECTION

NOT TO SCALE

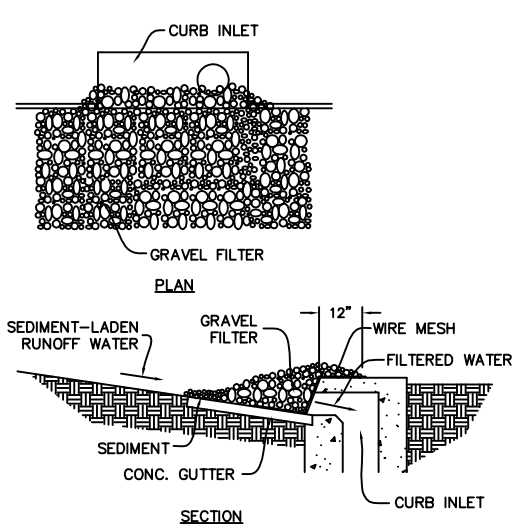

GRAVEL FILTER CURB INLET PROTECTION

NOT TO SCALE

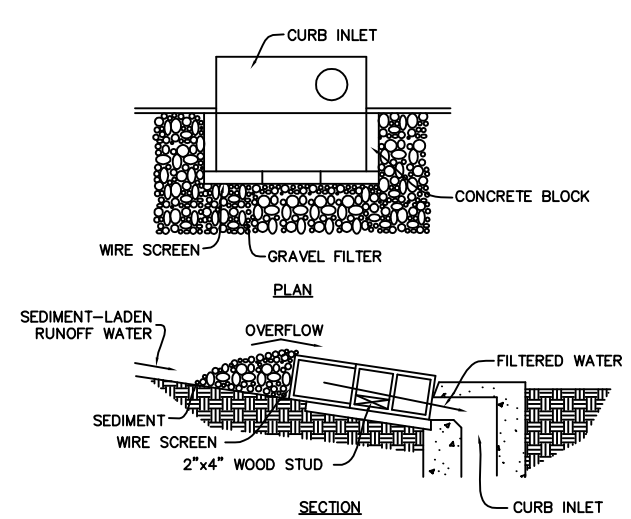

BLOCK AND GRAVEL CURB INLET PROTECTION

NOT TO SCALE

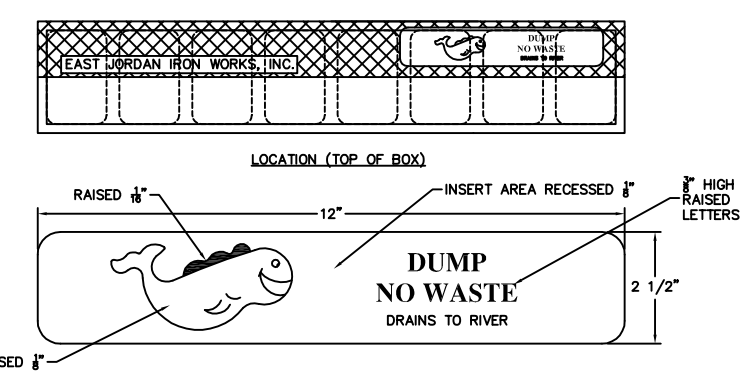

LOGO DETAIL AND LOCATION

NOT TO SCALE

APPROVED BY THE WEST LAFAYETTE BOARD OF PUBLIC WORKS AND SAFETY ON JULY 5, 2005.

City of West Lafayette
City Hall, 609 West Navajo
West Lafayette, IN 47906

Storm Sewer Structures, Drainage and Erosion Control Typical Details and Notes

Date	July 2005	Sheet	9 of 12

Holey Moley	(800) 382-5544
City Engineer	(765) 775-5130
Public Works Department	(765) 775-5145
Development Department	(765) 775-5160
Fire Department	(765) 775-5175
Police Department	(765) 775-5200

Project Name	Project Sheet Number
CITY STANDARDS	of

CONSTRUCTION SEQUENCE FOR BUILDING SITE EROSION CONTROL PRACTICE

STEP 1. EVALUATE THE SITE
BEFORE CONSTRUCTION EVALUATE THE ENTIRE SITE, MARKING FOR PROTECTION ANY IMPORTANT TREES AND ASSOCIATED ROOTING ZONES, UNIQUE AREAS TO BE PRESERVED, ON-SITE SEPTIC SYSTEM ABSORPTION FIELDS, AND VEGETATION SUITABLE FOR FILTER STRIPS, ESPECIALLY IN PERIMETER AREAS.

IDENTIFY VEGETATION TO BE SAVED
*SELECT AND IDENTIFY THE TREES, SHRUBS, AND OTHER VEGETATION TO BE SAVED (SEE "VEGETATIVE FILTER STRIPS" UNDER STEP 2 BELOW). ANY TREES WITHIN CITY RIGHT OF WAY REQUIRE CITY APPROVAL PRIOR TO BEING REMOVED.

PROTECT TREES AND SENSITIVE AREAS
*TO PREVENT ROOT DAMAGE, DO NOT GRADE, BURN, PLACE SOIL PILES, OR PARK VEHICLES NEAR TREES OR IN AREAS MARKED FOR PRESERVATION.
*PLACE PLASTIC MESH OR SNOW FENCE BARRIERS AROUND THE TREES' DRIPLINE TO PROTECT THE AREA BELOW THEIR BRANCHES.
* PLACE A PHYSICAL BARRIER, SUCH AS PLASTIC FENCING, AROUND THE AREA DESIGNATED FOR A SEPTIC SYSTEM ABSORPTION FIELD (IF APPLICABLE).

STEP 2. INSTALL PERIMETER EROSION AND SEDIMENT CONTROLS
IDENTIFY THE AREAS WHERE SEDIMENT-LADEN RUNOFF COULD LEAVE THE CONSTRUCTION SITE, AND INSTALL PERIMETER CONTROLS TO MINIMIZE THE POTENTIAL FOR OFF-SITE SEDIMENTATION. IT IS IMPORTANT THAT PERIMETER CONTROLS ARE IN PLACE BEFORE ANY OTHER EARTH-MOVING ACTIVITIES BEGIN.

PROTECT DOWN-SLOPE AREAS WITH VEGETATIVE FILTER STRIPS
* ON SLOPES OF LESS THAN 6 PERCENT, PRESERVE A 20 TO 30 FOOT WIDE VEGETATIVE BUFFER STRIP AROUND THE PERIMETER OF THE PROPERTY AND USE IT AS A FILTER STRIP FOR TRAPPING SEDIMENT. *DO NOT MOW FILTER STRIP VEGETATION SHORTER THAN 4 INCHES

WITH SILT FENCE
*USE SILT FENCING ALONG THE PERIMETER OF THE LOT'S DOWNSLOPE SIDE(S) TO TRAP SEDIMENT (SEE EXHIBIT #3).

INSTALL GRAVEL DRIVE
*RESTRICT ALL LOT ACCESS TO THIS DRIVE TO PREVENT VEHICLES FROM TRACKING MUD ONTO ROADWAYS (SEE EXHIBIT #4)

PROTECT STORM SEWER INLETS
*PROTECT NEARBY STORM SEWER CURB INLETS WITH STONE-FILLED OR GRAVEL-FILLED GEOTEXTILE BAGS (SEE EXHIBIT #1) OR EQUIVALENT MEASURES BEFORE DISTURBING SOIL.
*PROTECT ON-SITE STORM SEWER DROP INLETS WITH SILT FENCE MATERIAL (SEE EXHIBIT #2), STRAW BALES, OR EQUIVALENT MEASURES BEFORE DISTURBING SOIL.

STEP 3. PREPARE THE SITE FOR CONSTRUCTION
PREPARE THE SITE FOR CONSTRUCTION AND FOR INSTALLATION OF UTILITIES. MAKE SURE ALL CONTRACTORS (ESPECIALLY THE EXCAVATING CONTRACTOR) ARE AWARE OF AREAS TO BE PROTECTED.

SALVAGE AND STOCKPILE TOPSOIL/SUBSOIL
*REMOVE TOPSOIL (TYPICALLY THE UPPER 4 TO 6 INCHES OF SOIL MATERIAL) AND STOCKPILE.
*REMOVE SUBSOIL AND STOCKPILE SEPARATELY FROM THE TOPSOIL.
*LOCATE THE STOCKPILES AWAY FROM ANY DOWNSLOPE STREET, DRIVEWAY, STREAM, LAKE, WETLAND, DITCH, OR DRAINAGEWAY.
*IMMEDIATELY AFTER STOCKPILING, TEMPORARY-SEED THE STOCKPILES WITH ANNUAL RYE OR WINTER WHEAT AND/OR PLACE SEDIMENT BARRIERS AROUND THE PERIMETER OF THE PILES.

STEP 4. BUILD THE STRUCTURE(S) AND INSTALL THE UTILITIES
CONSTRUCT THE HOME AND INSTALL THE UTILITIES; ALSO INSTALL THE SEWAGE DISPOSAL SYSTEM AND DRILL THE WATER WELL (IF APPLICABLE); THEN CONSIDER THE FOLLOWING:

INSTALL DOWNSPOUT EXTENDERS
*ALTHOUGH NOT REQUIRED, DOWNSPOUT EXTENDERS ARE HIGHLY RECOMMENDED AS A MEANS OF PREVENTING LOT EROSION FROM ROOF RUNOFF.
*ADD THE EXTENDERS AS SOON AS THE GUTTERS AND DOWNSPOUTS ARE INSTALLED (SEE EXHIBIT #5).
*BE SURE THE EXTENDERS HAVE A STABLE OUTLET SUCH AS THE STREET, SIDEWALK, OR A WELL VEGETATED AREA.

STEP 5. MAINTAIN THE CONTROL PRACTICES
MAINTAIN ALL EROSION AND SEDIMENT CONTROL PRACTICES UNTIL CONSTRUCTION IS COMPLETED AND THE LOT IS STABILIZED.

*INSPECT THE CONTROL PRACTICES A MINIMUM OF TWICE A WEEK AND AFTER EACH STORM EVENT, MAKING ANY NEEDED REPAIRS IMMEDIATELY.
*TOWARD THE END OF EACH WORKDAY, SWEEP OR SCRAPE UP ANY SOIL TRACKED ONTO ROADWAYS. DO NOT FLUSH AREAS WITH WATER.
*BY THE END OF THE NEXT WORKDAY AFTER A STORM EVENT, CLEAN UP ANY SOIL WASHED OFF-SITE.

STEP 6. REVEGETATE THE BUILDING SITE
IMMEDIATELY AFTER ALL OUTSIDE CONSTRUCTION ACTIVITIES ARE COMPLETED, STABILIZE THE LOT WITH SOD, SEED, AND/OR MULCH.

REDISTRIBUTE THE STOCKPILED SUBSOIL AND TOPSOIL
* SPREAD THE STOCKPILED SUBSOIL TO ROUGH GRADE.
* SPREAD THE STOCKPILED TOPSOIL TO A DEPTH OF 4 TO 6 INCHES OVER ROUGH-GRADED AREAS.
* FERTILIZE AND LIME ACCORDING TO SOIL TEST RESULTS OR RECOMMENDATIONS OF A SEED SUPPLIER OR A PROFESSIONAL LANDSCAPING CONTRACTOR.

SEED OR SOD BARE AREAS
* CONTRACT LOCAL SEED SUPPLIERS OR PROFESSIONAL LANDSCAPING CONTRACTORS FOR RECOMMENDED SEEDING MIXTURES AND RATES.
* FOLLOW RECOMMENDATIONS OF A PROFESSIONAL LANDSCAPING CONTRACTOR FOR INSTALLATION OF SOD.
* WATER NEWLY SEEDED/SODDED AREAS EVERY DAY OR TWO TO KEEP THE SOIL MOIST. LESS WATERING IS NEEDED ONCE GRASS IS 2 INCHES TALL.

MULCH NEWLY SEEDED AREAS
*SPREAD STRAW MULCH ON NEWLY SEEDED AREAS, USING 1½ TO 2 BALES OF STRAW PER 1,000 SQUARE FEET.
*ON FLAT OR GENTLY SLOPING LAND, ANCHOR THE MULCH BY CRIMPING IT 2 TO 4 INCHES INTO THE SOIL. ON STEEP SLOPES, ANCHOR THE MULCH WITH NETTING OR TACKIFIERS. AN ALTERNATIVE TO ANCHORED MULCH WOULD BE THE USE OF EROSION CONTROL BLANKETS.

STEP 7. REMOVE REMAINING TEMPORARY CONTROL MEASURES
ONCE THE SOD AND/OR VEGETATION IS WELL ESTABLISHED, REMOVE ANY REMAINING TEMPORARY EROSION AND SEDIMENT CONTROL PRACTICES, SUCH AS:

*DOWNSPOUT EXTENDERS (OR SHORTEN TO OUTLET ONTO THE VEGETATED AREAS, ALLOWING FOR MAXIMUM INFILTRATION.
*STORM SEWER INLET PROTECTION MEASURES.

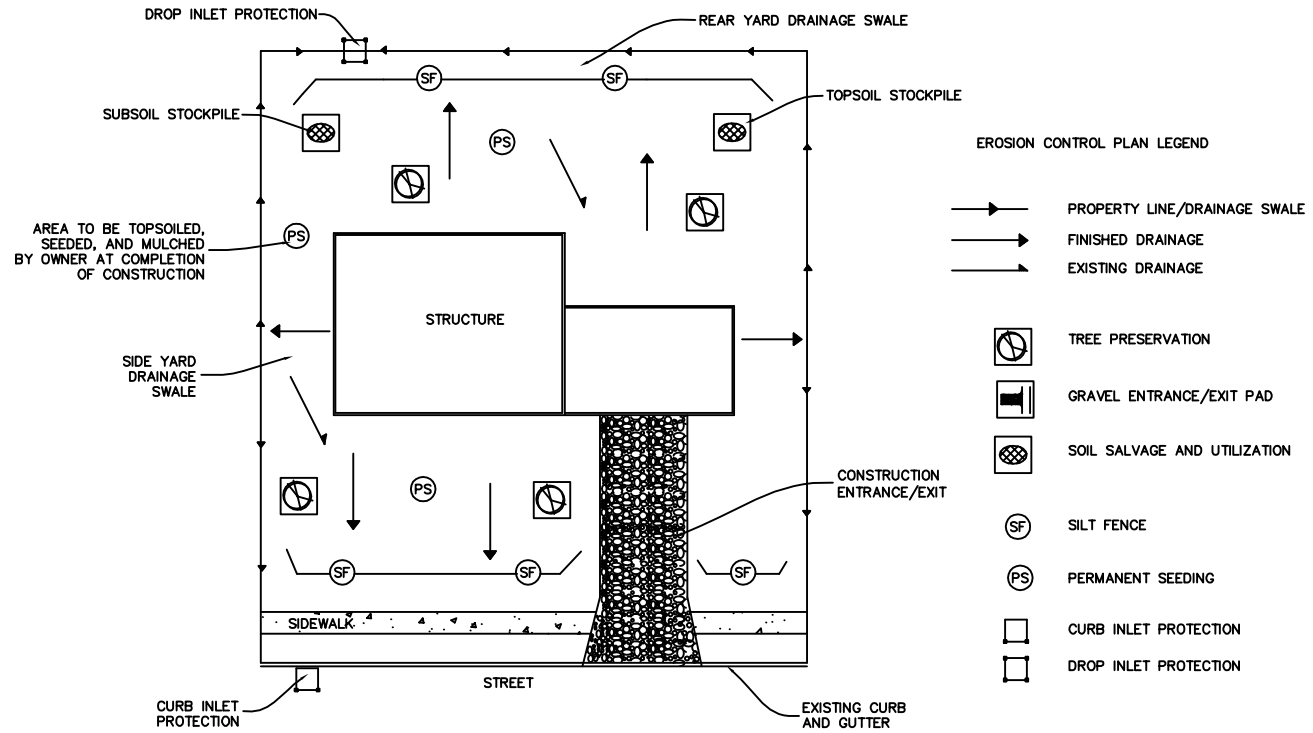

NOTES:
1. EROSION/SEDIMENT CONTROL MEASURES MUST BE FUNCTIONAL AND BE MAINTAINED THROUGHOUT CONSTRUCTION.
2. MAINTAIN POSITIVE DRAINAGE AWAY FROM THE STRUCTURE(S).

SAMPLE EROSION/SEDIMENT CONTROL PRACTICE PLAN
TYPICAL STRUCTURE UNDER CONSTRUCTION

CONSTRUCTION SEQUENCE FOR BUILDING SITE EROSION CONTROL PRACTICE

COMPILED INFORMATION PREPARED BY THE DIVISION OF SOIL CONSERVATION, INDIANA DEPARTMENT OF NATURAL RESOURCES
NOT TO SCALE

EROSION CONTROL NOTES:

1. CONTRACTOR SHALL INSTALL ALL REQUIRED SILT FENCES, SILT TRAPS, TREE PROTECTION AND INLET PROTECTION FOR EXISTING INLETS PRIOR TO THE START OF ANY EARTH MOVING OR STRIPPING.
2. CONTRACTOR SHALL INSTALL A GRAVEL CONSTRUCTION ENTRANCE OR SOME OTHER DEVICE PRIOR TO THE START OF EARTHWORK AS NECESSARY TO PREVENT SOIL FROM BEING TRACKED OR WASHED INTO EXISTING ROADWAYS.
3. LAND ALTERATIONS WHICH STRIP THE LAND OF VEGETATION, INCLUDING REGRADING, SHALL BE DONE IN A WAY THAT WILL MINIMIZE EROSION. WHENEVER FEASIBLE, NATURAL VEGETATION SHALL BE RETAINED AND PROTECTED AS GRADING IS DONE. INSTALL SILT TRAPS, SILT FENCES, SLOPE DRAINS, TEMPORARY DIVERSIONS AND OTHER RUNOFF CONTROL MEASURES AT APPROPRIATE LOCATIONS TO KEEP SEDIMENT CONTAINED ON SITE.
4. ALL DISTURBED AREAS SHALL BE SEEDED AND STRAW MULCHED AS SHOWN ON THE PLANS IMMEDIATELY AFTER COMPLETION OF GROUND DISTURBING ACTIVITY, FOR EACH PHASE AS THE DIFFERENT PHASES OF THE SITE ARE CONSTRUCTED.
5. PERMANENT AND FINAL VEGETATION OR STRUCTURAL EROSION CONTROL DEVICES SHALL BE INSTALLED AS SOON AS PRACTICAL.
6. THE DURATION OF TIME WHICH AN AREA REMAINS EXPOSED SHALL BE KEPT TO A PRACTICAL MINIMUM DEPENDING UPON THE WEATHER. IF CONSTRUCTION ACTIVITY IS TO CEASE FOR MORE THAN TWO WEEKS, THE DISTURBED AREAS SHALL BE TEMPORARILY SEEDED.
7. ALL STORM SEWER INLET PROTECTION DEVICES SHALL BE PUT IN PLACE AT THE TIME EACH INLET IS CONSTRUCTED.
8. CONTRACTOR SHALL MAINTAIN EROSION CONTROL MEASURES AND DEVICES DURING CONSTRUCTION AND UNTIL SILTATION OF THE STREETS AND STORM SEWERS WILL NO LONGER OCCUR.
9. ONCE ON-SITE EROSION AND SILTATION OF THE STREETS AND STORM SEWERS WILL NO LONGER OCCUR, THE CONTRACTOR SHALL REMOVE AND DISPOSE OF THE TEMPORARY EROSION CONTROL DEVICES.
10. THESE GENERAL PROCEDURES MAY NOT COVER ALL SITUATIONS. REFER TO EROSION CONTROL PLANS FOR SPECIFIC NOTES AND ADDITIONAL DETAILS.
11. EROSION CONTROL SHALL COMPLY WITH WEST LAFAYETTE ORDINANCE 08-05 (WEST LAFAYETTE STORMWATER CODE), INDIANA 327 IAC, AND INDIANA HANDBOOK FOR EROSION CONTROL IN DEVELOPING AREAS.
12. THE CITY ENGINEER HAS THE AUTHORITY TO REQUEST ADDITIONAL EROSION CONTROL MEASURES OR AMEND EROSION CONTROL PLANS SUBJECT TO ACTUAL SITE CONDITIONS.
13. THE CONTRACTOR MAY SUBSTITUTE DIFFERENT EROSION CONTROL DEVICES FOR THOSE SHOWN ON THE DRAWINGS SO LONG AS THE SUBSTITUTED DEVICES PERFORM AS REQUIRED BY WEST LAFAYETTE ORDINANCE 08-05 (WEST LAFAYETTE STORMWATER CODE), INDIANA 327 IAC AND "RULE 5".
14. THE CONTRACTOR IS TO INSTALL, MONITOR, AND MAINTAIN ALL REQUIRED EROSION CONTROL DEVICES IN ACCORDANCE WITH THE APPLICABLE PROVISIONS OF THE "INDIANA HANDBOOK FOR EROSION CONTROL IN DEVELOPING AREAS" LATEST EDITION, WHICH IS HEREBY INCORPORATED INTO THESE STANDARDS BY REFERENCE AND MADE A PART THEREOF.

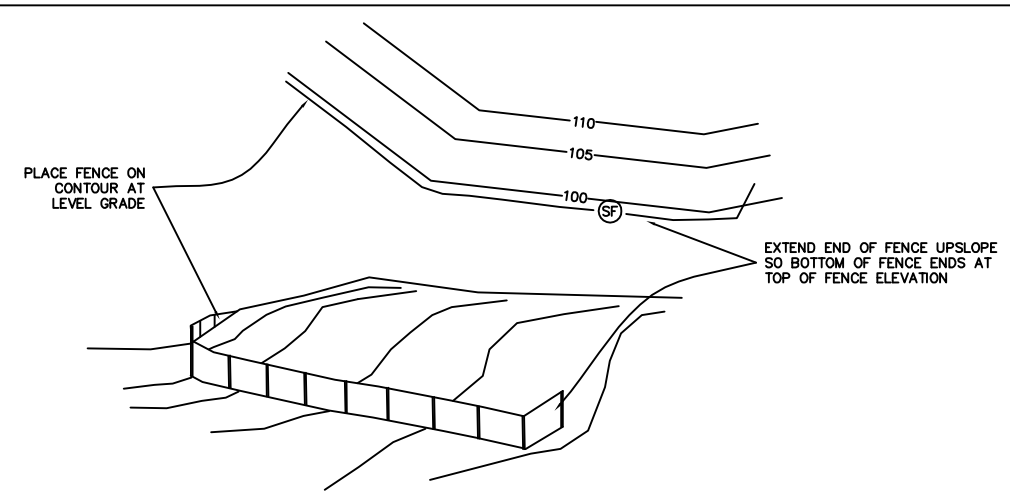

TYPICAL LAYOUT FOR SILT FENCE

DOWNSPOUT NOTES:

1. INSTALL EXTENDERS AS SOON AS GUTTERS AND DOWNSPOUTS ARE INSTALLED TO PREVENT EROSION FROM ROOF RUNOFF.
2. USE NON-PERFORATED (UNSLOTTED) DRAINAGE TILE.
3. ROUTE WATER TO A STABLE GRASSED OR PAVED AREA OR TO THE STORM SEWER.
4. REMOVE AFTER VEGETATION IS ESTABLISHED.

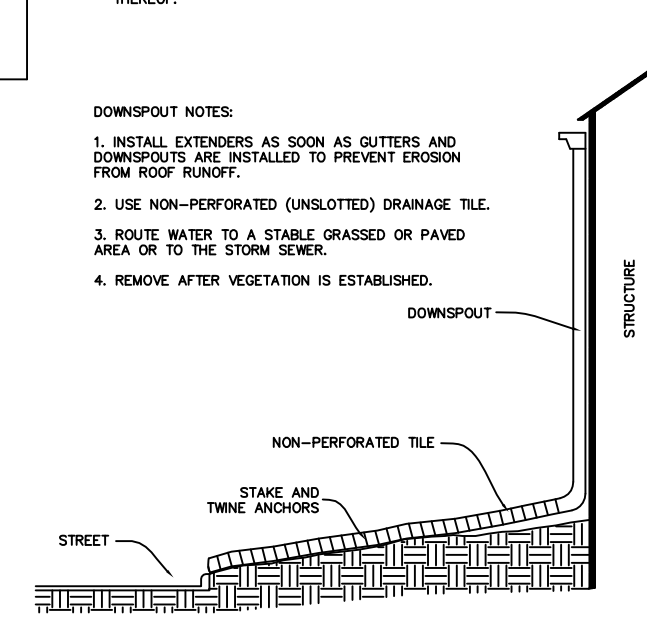

TEMPORARY DOWNSPOUT EXTENDERS

NOT TO SCALE

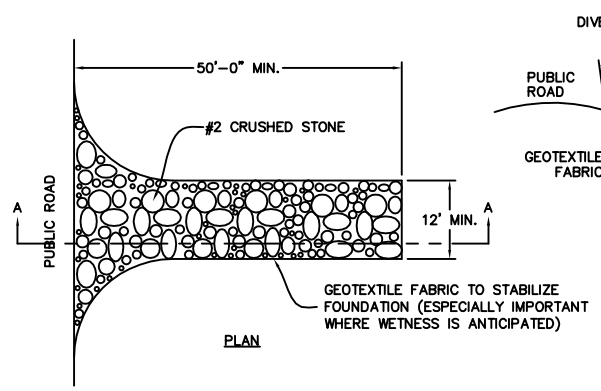

METHOD USED AT ENTRANCES/EXITS

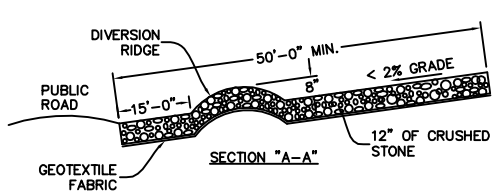

ENTRANCE NOTES:

1. PLACE 6 INCHES OF COARSE AGGREGATE (INDOT CA NO. 2) OVER A STABLE SUBGRADE.
2. CONSTRUCT THE DRIVE AT LEAST 12 FEET WIDE AND 50 FEET LONG OR THE DISTANCE TO THE FOUNDATION.
3. ADD STONE AS NEEDED TO MAINTAIN 6 INCHES OF CLEAN DEPTH.
4. TO IMPROVE STABILITY OR IF WET CONDITIONS ARE ANTICIPATED, PLACE GEOTEXTILE FABRIC ON THE GRADED FOUNDATION.

CONSTRUCTION GRAVEL ENTRANCE

NOT TO SCALE

SILT FENCE NOTES:

1. INSTALL PARALLEL TO THE CONTOUR OF THE LAND.
2. EXTEND ENDS UPSLOPE ENOUGH TO ALLOW WATER TO POND BEHIND THE FENCE.
3. EXCAVATE A TRENCH 4 INCHES WIDE AND 8 INCHES DEEP.
4. INSTALL FENCE WITH STAKES ON THE DOWNSLOPE SIDE.
5. BURY 12 INCHES OF FABRIC IN THE TRENCH, EXTENDING THE BOTTOM 4 INCHES TOWARD THE UPSLOPE SIDE.
6. BACKFILL TRENCH WITH SOIL MATERIAL, AND COMPACT.
7. JOIN SILT FENCE SECTIONS BY OVERLAPPING SECTIONS AND NAILING WITH LATH TO THE NEAREST POST.
8. INSPECT TWICE A WEEK AND AFTER EACH STORM EVENT, REPAIRING AS NEEDED AND REMOVING SEDIMENT DEPOSITS WHEN THEY REACH ONE-HALF THE FENCE HEIGHT. (NOTE: SILT FENCE HAS A LIFE EXPECTANCY OF 6 MONTHS TO 1 YEAR, WHEREAS STRAW BALE BARRIERS HAVE A LIMITED LIFE OF 3 MONTHS OR LESS)

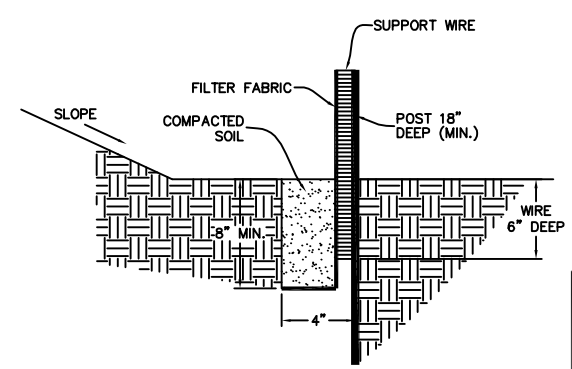

CROSS-SECTION OF SILT FENCE

SILT FENCE

NOT TO SCALE

APPROVED BY THE WEST LAFAYETTE BOARD OF PUBLIC WORKS AND SAFETY ON JULY 5, 2005.

City of West Lafayette
City Hall, 609 West Navajo
West Lafayette, IN 47906

Erosion Control
Typical Details and Notes

Date July 2005	Sheet 10 of 12

Holey Moley	(800) 382-5544
City Engineer	(765) 775-5130
Public Works Department	(765) 775-5145
Development Department	(765) 775-5160
Fire Department	(765) 775-5175
Police Department	(765) 775-5200

Project Name CITY STANDARDS	Project Sheet Number of

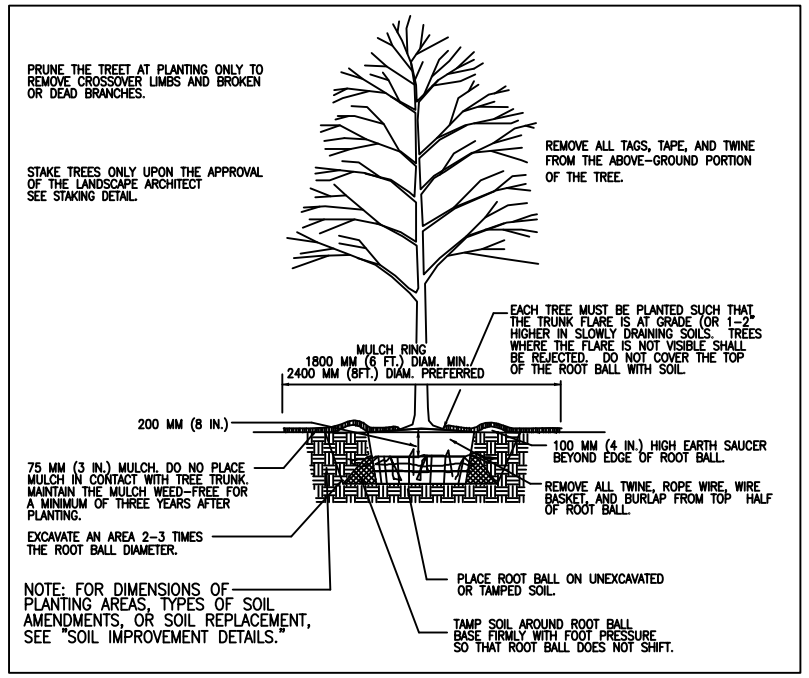

TREE PLANTING DETAIL FOR B&B IN ALL SOIL TYPES

SCALE: NOT TO SCALE

NOTE: THIS DETAIL ASSUMES THAT THE PLANTING SPACE IS LARGER THAN AN 8' SQUARE OPEN TO THE SKY, AND NOT COVERED BY ANY PAVING OR GRATING.

STAKING AND GUYING MATERIAL IS TO BE 3/4" WIDE, FLAT WOVEN, POLYPROPYLENE MATERIAL. 900 LB. BREAK STRENGTH. FASTEN TO STAKES IN A MANNER WHICH PERMITS TREE MOVEMENT AND SUPPORTS THE TREE.

STAKE ONLY WHEN NEEDED, I.E., EVERGREENS OR WINDY SITE OR SANDY SOIL OR TREE IS CROWN-HEAVY.

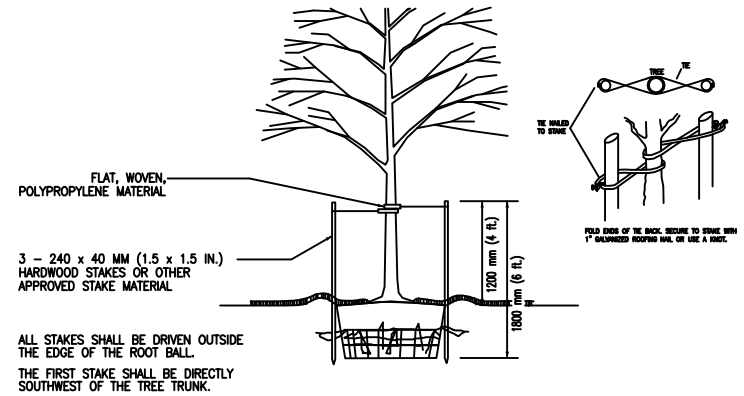

REMOVE ALL STAKING NO LATER THAN THE END OF THE FIRST FULL GROWING SEASON AFTER PLANTING. IT SHALL BE THE CONTRACTOR'S RESPONSIBILITY TO REMOVE STAKING MATERIALS.

TREE STAKING DETAIL, TREES 3" CALIPER OR LESS

SCALE: NOT TO SCALE

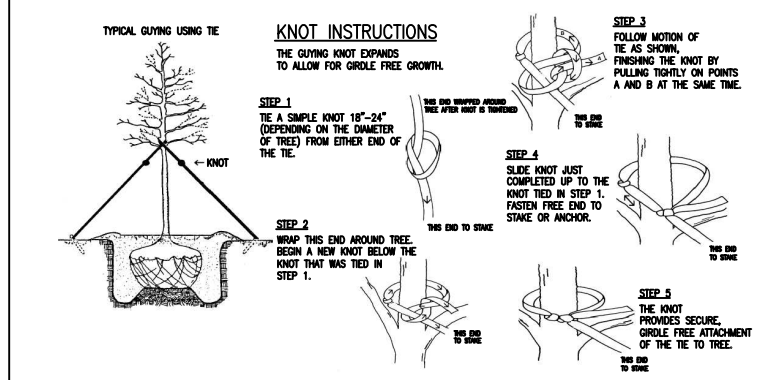

TREE STAKING DETAIL - KNOT TYING INSTRUCTIONS

SCALE: NOT TO SCALE

STAKING AND GUYING MATERIAL IS TO BE (AS ON PG. 2)

STAKE ONLY WHEN NEEDED, I.E., EVERGREENS OR WINDY SITE OR SANDY SOIL OR TREE IS CROWN-HEAVY.

INSTALL THREE GUYS PER TREE, SPACED EVENLY AROUND THE TRUNK.

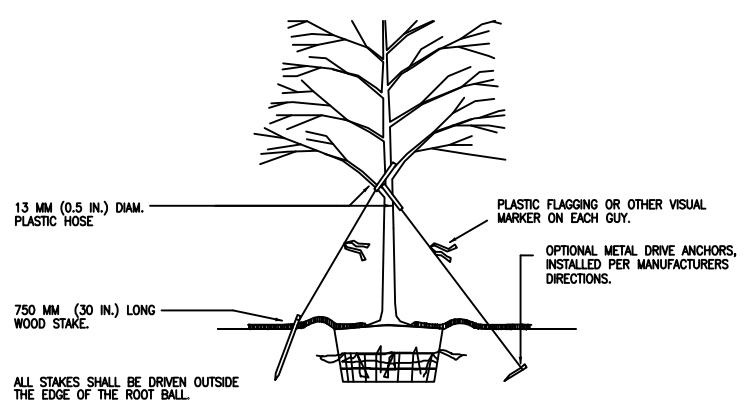

REMOVE ALL STAKING NO LATER THE END OF THE FIRST FULL GROWING SEASON AFTER PLANTING. IT SHALL BE THE CONTRACTOR'S RESPONSIBILITY TO REMOVE STAKING MATERIALS.

TREE STAKING DETAIL, TREES 3" CALIPER OR LARGER

SCALE: NOT TO SCALE

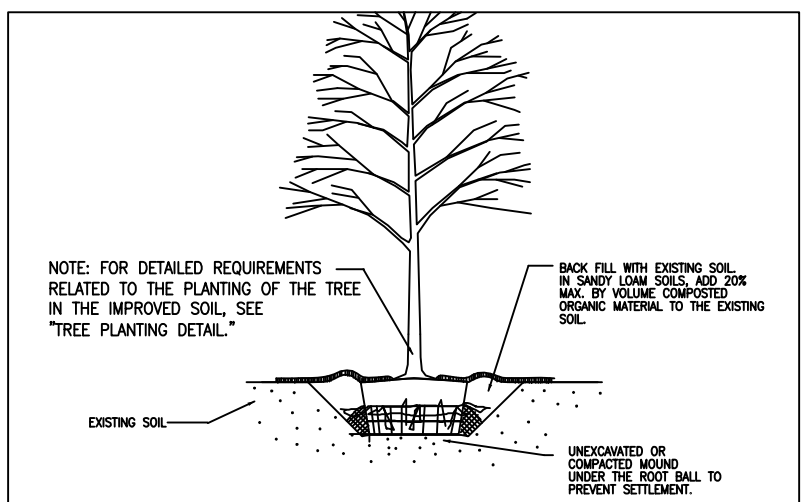

LOAMY SOILS INCLUDE THE FOLLOWING USDA TEXTURAL CLASSIFICATIONS AND HAVE A CLAY CONTENT OF BETWEEN 15 TO 27%: LOAM, SANDY LOAM AND SILT LOAM. NOTE THAT SOILS AT THE OUTER LIMITS OF THE LOAM CLASSIFICATIONS MAY PRESENT SPECIAL PLANTING PLANTING PROBLEMS NOT ANTICIPATED BY THIS DETAIL.

LOAMY SOILS ARE DEFINED AS GRANULAR OR BLOCKY FRIABLE SOILS, A MIXTURE OF SAND, SILT AND CLAY PARTICLES WITH A MINIMUM OF 1.5% BY DRY WEIGHT ORGANIC MATTER. THE SOIL MUST NOT BE SO COMPACTED AS TO IMPEDE ROOT GROWTH OR DRAINAGE. THE SOIL STRUCTURE SHALL NOT BE PLATY OR MASSIVE. THE SOIL MUST BE TESTED FOR TEXTURE, DRAINAGE CAPABILITY, PH, AND NUTRIENT VALUES PRIOR TO DETERMINING ANY ADDITIONAL SOIL IMPROVEMENTS.

SOIL IMPROVEMENT DETAIL

SCALE: NOT TO SCALE

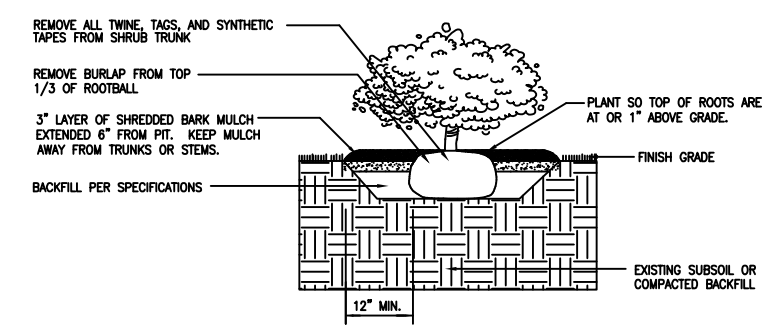

SHRUB DETAIL

SCALE: NOT TO SCALE

APPROVED BY THE WEST LAFAYETTE BOARD OF PUBLIC WORKS AND SAFETY ON JULY 5, 2005.

City of West Lafayette
City Hall, 609 West Navajo
West Lafayette, IN 47906

Landscaping

Standard Details

Date	July 2005	Sheet	11 of 12

Holey Moley	(800) 382-5544
City Engineer	(765) 775-5130
Public Works Department	(765) 775-5145
Development Department	(765) 775-5160
Fire Department	(765) 775-5175
Police Department	(765) 775-5200

Project Name

Project Sheet Number

of

LANDSCAPING SPECIFICATIONS

PART 1 - GENERAL

1.01 DESCRIPTION:
THIS WORK SHALL CONSIST OF FURNISHING, TRANSPORTING, AND INSTALLING ALL PLANTS OR OTHER MATERIALS REQUIRED FOR:
1. THE ESTABLISHMENT OF THE LANDSCAPE PLANTINGS, INCLUDING HAULING AND SPREADING OF TOPSOIL, AND FINISHED GRADING AS INDICATED ON THE PREPARED DRAWINGS AND SPECIFIED HEREIN.
2. PROTECTION OF EXISTING FEATURES. DURING CONSTRUCTION, PROTECT ALL EXISTING TREES, SHRUBS, AND OTHER SPECIFIED VEGETATION, SITE FEATURES AND IMPROVEMENTS, STRUCTURES, AND UTILITIES SPECIFIED HEREIN AND/OR ON SUBMITTED DRAWINGS. REMOVAL OR DESTRUCTION OF EXISTING PLANTINGS IS PROHIBITED UNLESS SPECIFICALLY AUTHORIZED BY THE GREENSPACE ADMINISTRATOR.

1.02 APPLICABLE STANDARDS:
A. AMERICAN NATIONAL STANDARDS FOR TREE CARE OPERATIONS , ANSI A300. AMERICAN NATIONAL STANDARDS INSTITUTE, 11 WEST 42ND STREET, NEW YORK, NY 10036.
B. AMERICAN STANDARD FOR NURSERY STOCK , ANSI Z60.1, AMERICAN NURSERY AND LANDSCAPE ASSOCIATION, 1250 EYE STREET, NW, SUITE 500, WASHINGTON, D.C. 20005.
C. HORTUS THIRD, THE STAFF OF THE L.H. BAILEY HORTORIUM. 1976. MACMILLAN PUBLISHING CO., NEW YORK.
D. TREE MANUAL AND GUIDE TO THE WEST LAFAYETTE LANDSCAPE ORDINANCE, REVISED 03/04.
E. ALL STANDARDS SHALL INCLUDE THE LATEST ADDITIONS AND AMENDMENTS AS OF THE DATE OF ADVERTISEMENT FOR BIDS.

1.03 PLAN REQUIREMENTS:
A. ON THE LANDSCAPE PLAN, PROVIDE A SCHEDULE SHOWING QUANTITY, SIZE, GENUS, SPECIES, VARIETY, AND CONDITION (B&B OR CONTAINER) OF TREES AND SHRUBS INDICATED, COMPLYING WITH APPLICABLE REQUIREMENTS OF ANSI Z60.1 "AMERICAN STANDARD FOR NURSERY STOCK." ALSO SHOW GREENSPACE PERCENTAGE. GREENSPACE PERCENTAGE INCLUDES ALL PLANT AREAS INTERIOR TO THE PROPERTY LINES. NOT INCLUDED IN GREENSPACE PERCENTAGE ARE AREAS OF GRAVEL OR STONE MULCH. THE PERCENTAGE SHALL BE CALCULATED AS FOLLOWS: 100% - IMPERVIOUS SURFACE PERCENTAGE = GREENSPACE PERCENTAGE. GREENSPACE SHALL BE PLANTED WITH TREES, SHRUBS, GROUNDCOVER OR GRASS, CONSISTENT WITH GOOD LANDSCAPE DESIGN.

1.04 QUALITY ASSURANCE:
A. SOURCE QUALITY CONTROL:
1. GENERAL: A CERTIFICATE OF NURSERY INSPECTION FROM EACH STATE DEPARTMENT OF AGRICULTURE FROM WHICH PLANTS ORIGINATE AND/OR A DATED, CURRENT YEAR INDIANA DEPARTMENT OF NATURAL RESOURCES NURSERY DEALER CERTIFICATE MUST BE AVAILABLE UPON REQUEST. THE NURSERY MUST VERIFY WHETHER OR NOT THEY ARE UNDER AN INVASIVE PEST QUARANTINE OR OTHER LIMITING FACTOR FROM THE DNR OR THE USDA. ALL PLANT MATERIAL SHIPPED FROM NURSERY VENDORS SUBJECT TO QUARANTINES MUST BE ACCOMPANIED BY A CERTIFICATE OF COMPLIANCE. TO DETERMINE IF VENDORS ARE SUBJECT TO QUARANTINES, CALL THE DNR SUPERVISOR OF PLANT REGULATORY SERVICES.
2. INSPECTION: THE GREENSPACE ADMINISTRATOR MAY INSPECT TREES AND SHRUBS EITHER AT PLACE OF GROWTH OR AT SITE BEFORE PLANTING, FOR COMPLIANCE WITH REQUIREMENTS FOR GENUS, SPECIES, VARIETY, SIZE, AND QUALITY. GREENSPACE ADMINISTRATOR RETAINS THE RIGHT TO FURTHER INSPECT TREES AND SHRUBS FOR SIZE AND CONDITION OF BALLS AND ROOT SYSTEMS, INSECTS, INJURIES AND LATENT DEFECTS, AND TO REJECT UNSATISFACTORY OR DEFECTIVE MATERIAL AT ANY TIME DURING PROGRESS OF WORK. REMOVE REJECTED TREES OR SHRUBS IMMEDIATELY FROM PROJECT SITE.

1.05 DELIVERY, STORAGE, AND HANDLING:
A. SOD: HARVEST, DELIVER, STORE, AND HANDLE SOD ACCORDING TO THE REQUIREMENTS OF THE AMERICAN SOD PRODUCERS ASSOCIATION'S (ASPA) "SPECIFICATIONS FOR TURFGRASS SOD MATERIALS AND TRANSPLANTING/INSTALLING."
B. TREES AND SHRUBS: DO NOT PRUNE BEFORE DELIVERY. PROTECT BARK, BRANCHES, AND ROOT SYSTEMS FROM SUN-SCALD, DRYING, SWEATING, WHIPPING, AND OTHER HANDLING AND TYING DAMAGE. DO NOT BEND OR BIND-TIE TREES OR SHRUBS IN SUCH A MANNER AS TO DESTROY NATURAL SHAPE. PROVIDE PROTECTIVE COVERING DURING DELIVERY. DO NOT DROP TREES AND SHRUBS DURING DELIVERY.
C. HANDLE BALLED AND BURLAPPED AND CONTAINER STOCK BY THE ROOT BALL.
D. DELIVER TREES, SHRUBS, GROUNDCOVERS, AND PLANTS AFTER PREPARATIONS FOR PLANTING HAVE BEEN COMPLETED AND INSTALL IMMEDIATELY. IF PLANTING IS DELAYED MORE THAN 6 HOURS AFTER DELIVERY, SET PLANTING MATERIALS IN SHADE, PROTECT FROM WEATHER AND MECHANICAL DAMAGE, AND KEEP ROOTS MOIST. SET BALLED STOCK ON GROUND AND COVER BALL WITH SOIL, PEAT MOSS, SAWDUST, OR OTHER ACCEPTABLE MATERIAL.

1.06 PROJECT CONDITIONS:
A. UTILITIES: DETERMINE LOCATION OF ABOVE GRADE AND UNDERGROUND UTILITIES AND PERFORM WORK IN A MANNER WHICH WILL AVOID DAMAGE. CALL INDIANA UNDERGROUND AT 1-800-382-5544. PER INDIANA STATE LAW IS-69-1991, IT IS AGAINST THE LAW TO EXCAVATE WITHOUT NOTIFYING THE UNDERGROUND LOCATION SERVICE TWO WORKING DAYS BEFORE COMMENCING WORK.
B. WHEN CONDITIONS DETRIMENTAL TO PLANT GROWTH ARE ENCOUNTERED, SUCH AS RUBBLE FILL, ADVERSE DRAINAGE CONDITIONS, OR OBSTRUCTIONS, NOTIFY GREENSPACE ADMINISTRATOR BEFORE PLANTING.

1.07 COORDINATION AND SCHEDULING:
A. PLANTING TIME: PROCEED WITH AND COMPLETE LANDSCAPE WORK AS RAPIDLY AS PORTIONS OF SITE BECOME AVAILABLE, WORKING WITHIN SEASONAL LIMITATIONS FOR EACH KIND OF LANDSCAPE WORK REQUIRED. PLANT OR INSTALL MATERIALS ONLY WHEN GROUND AND BACKFILL IS NOT FROZEN.
B. PLANT TREES AND SHRUBS AFTER FINAL GRADES ARE ESTABLISHED.

PART 2 - PRODUCTS

2.01 PLANTS
A. PLANTS SHALL BE TRUE TO SPECIES AND VARIETY SPECIFIED AND NURSERY-GROWN IN ACCORDANCE WITH GOOD HORTICULTURAL PRACTICES UNDER CLIMATIC CONDITIONS SIMILAR TO THOSE IN THE LOCALITY OF THE PROJECT FOR AT LEAST TWO YEARS. THEY SHALL HAVE BEEN FRESHLY DUG (DURING THE MOST RECENT FAVORABLE HARVEST SEASON).
1. ALL PLANT NAMES AND DESCRIPTIONS SHALL BE AS DEFINED IN HORTUS THIRD.
2. ALL PLANTS SHALL BE GROWN AND HARVESTED IN ACCORDANCE WITH THE AMERICAN STANDARD FOR NURSERY STOCK .
B. UNLESS SPECIFICALLY NOTED, ALL PLANTS SHALL BE OF SPECIMEN QUALITY, HEAVY, SYMMETRICAL, AND SUPERIOR IN FORM, COMPACTNESS AND SYMMETRY. THEY SHALL BE SOUND, HEALTHY, VIGOROUS, WELL BRANCHED, AND DENSELY FOLIATED WHEN IN LEAF; FREE OF DISEASE AND INSECTS, EGGS, OR LARVAE; AND SHALL HAVE HEALTHY, WELL-DEVELOPED ROOT SYSTEMS. THEY SHALL BE FREE FROM PHYSICAL DAMAGE OR OTHER CONDITIONS THAT WOULD PREVENT VIGOROUS GROWTH.
1. TREES WITH MULTIPLE LEADERS, UNLESS SPECIFIED, WILL BE REJECTED. TREES WITH A DAMAGED OR CROOKED LEADER, BARK ABRASIONS, SUN-SCALD, DISFIGURING KNOTS, INSECT DAMAGE, OR CUTS OF LIMBS OVER 1 IN. (20 MM) IN DIAMETER THAT ARE NOT COMPLETELY CLOSED WILL BE REJECTED.

C. PLANTS SHALL CONFORM TO THE MEASUREMENTS SPECIFIED, EXCEPT THAT PLANTS LARGER THAN THOSE SPECIFIED MAY BE USED IF APPROVED BY THE GREENSPACE ADMINISTRATOR. IF LARGER PLANTS ARE APPROVED, THE ROOT BALL SHALL BE INCREASED IN PROPORTION TO THE SIZE OF THE PLANT.
1. CALIPER MEASUREMENTS SHALL BE TAKEN ON THE TRUNK 6 IN. (150 MM) ABOVE THE NATURAL GROUND LINE FOR TREES UP TO AND INCLUDING 4 IN. (100 MM) IN CALIPER, AND 12 IN. (300 MM) ABOVE THE NATURAL GROUND LINE FOR TREES OVER 4 IN. (100 MM) IN CALIPER. HEIGHT AND SPREAD DIMENSIONS SPECIFIED REFER TO THE MAIN BODY OF THE PLANT AND NOT FROM BRANCH TIP TO BRANCH TIP. PLANTS SHALL BE MEASURED WHEN BRANCHES ARE IN THEIR NORMAL POSITION. IF A RANGE OF SIZES IS GIVEN, NO PLANT SHALL BE LESS THAN THE MINIMUM SIZE, AND NO LESS THAN 50 PERCENT (50%) OF THE PLANTS SHALL BE AS LARGE AS THE MAXIMUM SIZE SPECIFIED. MEASUREMENTS SPECIFIED ARE MINIMUM SIZES ACCEPTABLE AFTER PRUNING, WHERE PRUNING IS REQUIRED. PLANTS THAT MEET MEASUREMENTS BUT DO NOT POSSESS A STANDARD RELATIONSHIP BETWEEN HEIGHT AND SPREAD, ACCORDING TO THE AMERICAN STANDARD FOR NURSERY STOCK , SHALL BE REJECTED.
D. SUBSTITUTIONS OF PLANT MATERIALS WILL NOT BE PERMITTED UNLESS AUTHORIZED IN WRITING BY THE GREENSPACE ADMINISTRATOR. IF PROOF IS SUBMITTED IN WRITING THAT A PLANT SPECIFIED IS NOT OBTAINABLE, CONSIDERATION WILL BE GIVEN TO THE NEAREST AVAILABLE SIZE OR SIMILAR VARIETY.
E. THE CONTRACTOR SHALL ENSURE THAT ALL PLANT MATERIALS SHOWN ON THE DRAWINGS ARE INCLUDED IN HIS OR HER BID.
F. BALLED AND BURLAPPED (B&B) PLANT MATERIALS SHALL BE PROPERLY DUG WITH FIRM, NATURAL BALLS OF SOIL RETAINING AS MANY FIBROUS ROOTS AS POSSIBLE, IN SIZES AND SHAPES AS SPECIFIED IN THE AMERICAN STANDARD FOR NURSERY STOCK. BALLS SHALL BE FIRMLY WRAPPED WITH NONSYNTHETIC, DEGRADABLE BURLAP AND SECURED WITH NAILS AND HEAVY, NONSYNTHETIC, DEGRADABLE TWINE. THE ROOT FLARE SHALL BE APPARENT AT SURFACE OF BALL. TREES WITH LOOSE, BROKEN, PROCESSED, OR MANUFACTURED ROOT BALLS WILL NOT BE ACCEPTABLE, EXCEPT WITH SPECIAL WRITTEN APPROVAL BEFORE PLANTING.
G. CONTAINER PLANTS
1. PLANTS GROWN IN CONTAINERS SHALL BE OF APPROPRIATE SIZE FOR THE CONTAINER AS SPECIFIED IN THE MOST RECENT EDITION OF THE AMERICAN STANDARD FOR NURSERY STOCK AND BE FREE OF CIRCLING ROOTS ON THE EXTERIOR AND INTERIOR OF THE ROOT BALL.
2. CONTAINER PLANTS SHALL HAVE BEEN GROWN IN THE CONTAINER LONG ENOUGH TO HAVE ESTABLISHED ROOTS THROUGHOUT THE GROWING MEDIUM.
3. THE ROOT FLARE SHALL BE APPARENT AT SURFACE OF CONTAINER GROWN STOCK.
H. MECHANIZED TREE SPADE REQUIREMENTS:
1. TREES MAY BE MOVED AND PLANTED WITH AN APPROVED MECHANICAL TREE SPADE. THE TREE SPADE SHALL MOVE TREES LIMITED TO THE MAXIMUM SIZE FOR A SIMILAR B&B ROOT-BALL DIAMETER ACCORDING TO THE *AMERICAN STANDARD FOR NURSERY STOCK* OR THE MANUFACTURER'S MAXIMUM SIZE RECOMMENDATION FOR THE TREE SPADE BEING USED, WHICHEVER IS SMALLER.

2.02 TREE AND SHRUB MATERIAL:
A. SOIL BALLS SHALL NOT BE BROKEN OR LOOSE. IF, WHEN PULLED, THE STEM OR CROWN MOVES AND THE BALL DOES NOT, THE PLANT WILL BE REJECTED.
B. THE ROOT FLARE SHOULD BE AT THE SOIL LINE ON TOP OF THE BALL. THE PLANT WAS PLANTED TOO DEEP IF YOU SEE THE ROOT FLARE DEEPER INSIDE THE BALL WITH MOST OF THE ROOTS NEAR THE BOTTOM OF THE BALL. IF THE UPPERMOST ROOTS ARE MORE THAN 4 INCHES BELOW THE TOP OF THE SOIL BALL, THE PLANT WILL BE REJECTED.
C. PLANTS MUST HAVE A BALANCED ROOT SYSTEM THAT IS WELL DISTRIBUTED AND NOT ONE-SIDED, CIRCLING OR GIRDLING.
D. BUDS ON PLANTS (IF VISIBLE) SHOULD BE FULL, MOIST, AND GREEN INSIDE WHEN SPLIT APART.
E. TREES MUST HAVE A DEFINED CENTRAL LEADER WITH A MINIMUM OF EIGHT BRANCHES RADIATING TO ALL SIDES OF THE TREE. THE TREE IS ACCEPTABLE IF IT CAN BE PRUNED TO A CENTER LEADER.
F. CONTAINER PLANTS ARE TO GROW IN CONTAINERS FOR A MINIMUM OF 90 DAYS PRIOR TO DELIVERY.
G. THE ROOT FLARE SHALL BE APPARENT AT SURFACE OF CONTAINER GROWN STOCK.
H. ROOTS MUST FILL THE SOIL BALL OF THE CONTAINER GROWN PLANT.
I. ROOT BOUND PLANTS WILL BE REJECTED.
J. LABEL ALL TREES AND SHRUBS OF EACH VARIETY, SIZE AND CALIPER WITH A SECURELY ATTACHED, WATERPROOF TAG BEARING LEGIBLE DESIGNATION OF BOTANICAL AND COMMON NAME.

2.03 SHADE AND FLOWERING TREES:
A. SHADE TREES: SINGLE-STEM TREES WITH STRAIGHT TRUNK, WELL-BALANCED CROWN, AND INTACT LEADER, OF HEIGHT AND CALIPER INDICATED, CONFORMING TO ANSI Z60.1 FOR TYPE OF TREES REQUIRED.
B. PROVIDE BALLED AND BURLAPPED TREES.
1. CONTAINER-GROWN DECIDUOUS FLOWERING TREES WILL BE ACCEPTABLE IN LIEU OF BALLED AND BURLAPPED DECIDUOUS TREES SUBJECT TO MEETING ANSI Z60.1 LIMITATIONS FOR CONTAINER STOCK.

2.04 DECIDUOUS SHRUBS:
A. FORM AND SIZE: DECIDUOUS SHRUBS WITH NOT LESS THAN THE MINIMUM NUMBER OF CANES REQUIRED BY AND MEASURED ACCORDING TO ANSI Z60.1 FOR TYPE, SHAPE, AND HEIGHT OF SHRUB.
B. PROVIDE BALLED AND BURLAPPED DECIDUOUS SHRUBS.
1. CONTAINER-GROWN DECIDUOUS SHRUBS WILL BE ACCEPTABLE IN LIEU OF BALLED AND BURLAPPED DECIDUOUS SHRUBS SUBJECT TO MEETING ANSI Z60.1 LIMITATIONS FOR CONTAINER STOCK.

2.05 GROUNDCOVERS AND HERBACEOUS PLANTS
A. PROVIDE GROUNDCOVERS AND HERBACEOUS PLANTS ESTABLISHED AND WELL ROOTED IN REMOVABLE CONTAINERS OR INTEGRAL PEAT POTS AND WITH NOT LESS THAN THE MINIMUM NUMBER AND LENGTH OF RUNNERS REQUIRED BY ANSI Z60.1 FOR THE POT SIZE INDICATED.

2.06 GRASS MATERIALS:
A. SOD: CERTIFIED TURFGRASS SOD COMPLYING WITH ASPA SPECIFICATIONS FOR MACHINE-CUT THICKNESS, SIZE, STRENGTH, MOISTURE CONTENT, AND MOWED HEIGHT, AND FREE OF WEEDS AND UNDESIRABLE NATIVE GRASSES. PROVIDE VIABLE SOD OF UNIFORM DENSITY, COLOR, AND TEXTURE, STRONGLY ROOTED, AND CAPABLE OF VIGOROUS GROWTH AND DEVELOPMENT WHEN PLANTED.
B. SEED: SEED MIXTURE "R" AS DESCRIBED IN SECTION 621.06 OF THE 1999 INDIANA DEPARTMENT OF TRANSPORTATION STANDARD SPECIFICATIONS SECTION 621.06 (A).
C. MULCH: MULCH METHOD A OR B AS DESCRIBED IN SECTION 621.05 OF 1999 INDIANA DEPARTMENT OF TRANSPORTATION STANDARD SPECIFICATIONS AND SECTION 621.05 (C).

2.07 FILL MATERIAL:
A. SATISFACTORY FILL MATERIALS: ASTMD 2487 SOIL CLASSIFICATION GROUPS GW, GP, GM, SW, SP AND SM; FREE OF ROCK OR GRAVEL LARGER THAN 2 INCHES (50 MM)IN ANY DIMENSION, DEBRIS, WATER, FROZEN MATERIALS, VEGETATION AND OTHER DELETERIOUS MATTER.
B. TOPSOIL: PROVIDE TOPSOIL THAT IS FERTILE, FRIABLE, NATURAL LOAM, SURFACE SOIL, REASONABLY FREE OF SUBSOIL, CLAY, LIMPS, BRUSH, WEEDS AND OTHER LITTER, AND FREE OF ROOTS, STUMPS, STONES LARGER THAN 1 INCH IN ANY DIRECTION, AND OTHER EXTRANEOUS OR TOXIC MATTER HARMFUL TO PLANT GROWTH. TOPSOIL SHALL CONTAIN A MINIMUM TWO PERCENT (2%) ORGANIC MATTER.
THE USE OF ON-SITE NATIVE TOPSOIL IS ENCOURAGED, PROVIDED IT MEETS THE STANDARD
AND CAN BE MODIFIED TO MEET THE REQUIREMENTS SET OUT OR SPECIFIED FOR GROWING MEDIUM. AMENDED SUBSOIL MAY BE CONSIDERED FOR USE, PROVIDED THAT; ADDITIONAL ORGANIC MATTER IS AVAILABLE, THE SOIL STRUCTURE IS ACCEPTABLE, AND A SOIL TEST PERFORMED ON THE AMENDED PRODUCT PRIOR TO PLACEMENT INDICATES THE SOIL MEETS STANDARD GROWING REQUIREMENTS.

2.08 MULCHES:
A. MULCH SHALL BE ORGANIC MULCH, FREE FROM DELETERIOUS MATERIALS AND SUITABLE AS A TOP DRESSING OF TREES AND SHRUBS, CONSISTING OF SHREDDED HARDWOOD BARK.

2.09 STAKES AND GUYS:
A. UPRIGHT AND GUY STAKES: ROUGH-SAWN, SOUND, NEW HARDWOOD, REDWOOD, OR PRESSURE-PRESERVATIVE-TREATED SOFTWOOD, FREE OF KNOTS, HOLES, CROSS GRAIN, AND OTHER DEFECTS, 2 BY 2 INCHES (50 BY 50 MM) BY LENGTH INDICATED, POINTED AT ONE END.
B. WIDE WEBBING STRAP: POLYPROPYLENE, WOVEN, REINFORCED STRAPS, 3/4" WIDE, 900 LB. BREAKING STRENGTH.

PART 3 - EXECUTION

3.01 PRESERVATION
A. PROTECT EXISTING TREES THAT ARE TO BE SAVED BY ERECTING CONSTRUCTION FENCE AROUND THESE TREES BEFORE ANY SITE WORK BEGINS. PLACE FENCING AT LEAST AT THE DRIPLINE OF THE TREE. THE FENCED AREA IS TO BE KEPT CLEAR OF BUILDING MATERIALS, WASTE AND EXCESS SOIL. NO DIGGING, TRENCHING, COMPACTION OR OTHER SOIL DISTURBANCE IS ALLOWED IN THE FENCED AREA.

3.02 GROUNDCOVER AND PERENNIAL PLANT BED PREPARATION:
A. TILL SOIL IN BEDS TO A MINIMUM DEPTH OF 8 INCHES (200 MM).

3.03 EXCAVATION FOR TREES AND SHRUBS:
A. PITS AND TRENCHES: EXCAVATE WITH VERTICAL SIDES AND WITH BOTTOM OF EXCAVATION SLIGHTLY RAISED AT CENTER TO ASSIST DRAINAGE. LOOSEN HARD SUBSOIL IN BOTTOM OF EXCAVATION. FOR TREE PIT OR PARKING LOT ISLAND BACKFILL, REMOVE ALL COMPACTED SOIL AND AGGREGATE BASE (OR OTHER MATERIALS OR CONSTRUCTION DEBRIS DETRIMENTAL TO OPTIMAL PLANT GROWTH). REPLACE WITH TOPSOIL AS DEFINED IN THESE SPECIFICATIONS TO A DEPTH OF 3'.
1. BALLED AND BURLAPPED TREES AND SHRUBS: EXCAVATE APPROXIMATELY 2 TIMES AS WIDE AS BALL DIAMETER AND EQUAL TO BALL DEPTH.
2. CONTAINER-GROWN SHRUBS: EXCAVATE TO CONTAINER WIDTH AND DEPTH.
B. DISPOSE OF SUBSOIL REMOVED FROM LANDSCAPE EXCAVATIONS. DO NOT MIX WITH PLANTING SOIL OR USE AS BACKFILL.
C. OBSTRUCTIONS: NOTIFY GREENSPACE ADMINISTRATOR IF UNEXPECTED ROCK OR OBSTRUCTIONS DETRIMENTAL TO TREES OR SHRUBS ARE ENCOUNTERED IN EXCAVATIONS.
1. HARDPAN LAYER: DRILL 6 INCH (150 MM) DIAMETER HOLES INTO FREE-DRAINING STRATA OR TO A DEPTH OF 10 FEET (3 M), WHICHEVER IS LESS, AND BACKFILL WITH FREE-DRAINING MATERIAL.
D. DRAINAGE: NOTIFY GREENSPACE ADMINISTRATOR IF SUBSOIL CONDITIONS EVIDENCE UNEXPECTED WATER SEEPAGE OR RETENTION IN TREE OR SHRUB PITS.
1. GREENSPACE ADMINISTRATOR HAS THE OPTION TO REQUIRE THE INSTALLATION OF 8" DRAINAGE PITS AT THE BOTTOM OF THE BALL EXCAVATION TO FACILITATE DRAINAGE. USE AN 8" AUGER TO DIG 36" DEEP PIT. FILL PIT WITH WASHED DRAINAGE FILL.
2. REMOVE AND DISPOSE OF ROCK MATERIAL AND OBSTRUCTIONS ENCOUNTERED.

3.04 PLANTING TREES AND SHRUBS:
A. SET BALLED AND BURLAPPED STOCK PLUMB AND IN CENTER OF PIT OR TRENCH WITH TOP OF BALL RAISED ABOVE ADJACENT FINISH GRADES AS INDICATED.
1. PLACE STOCK ON LAYER OF COMPACTED PLANTING SOIL.
2. REMOVE BURLAP FROM TOPS OF BALLS AND PARTIALLY FROM SIDES, BUT DO NOT REMOVE FROM UNDER BALLS. REMOVE THE TOP THIRD OF WIRE BASKETS. DO NOT USE PLANTING STOCK IF BALL IS CRACKED OR BROKEN BEFORE OR DURING PLANTING OPERATION. REMOVE ALL TWINE, ROPE AND WIRE FROM THE TRUNK AND ROOTBALL.
3. EACH TREE MUST BE PLANTED SUCH THAT THE ROOT FLARE IS VISIBLE AT THE TOP OF THE ROOT BALL. TREES WHERE THE ROOT FLARE IS NOT VISIBLE SHALL BE REJECTED. DO NOT COVER THE TOP OF THE ROOT BALL WITH SOIL. IN CASES WHERE THE ROOT FLARE IS NOT VISIBLE, CONSULT WITH GREENSPACE ADMINISTRATOR PRIOR TO PLANTING. THE GREENSPACE ADMINISTRATOR MAY REQUEST CONTRACTOR TO SHAVE THE SOIL FROM TOP OF ROOT BALL BELOW ROOT FLARE. THE GREENSPACE ADMINISTRATOR MAY REJECT THE TREE PENDING THE CONDITION OF ROOT BALL AND TREE.
4. PLACE BACKFILL AROUND BALL IN LAYERS, TAMPING TO SETTLE BACKFILL AND ELIMINATE VOIDS AND AIR POCKETS. WHEN PIT IS APPROXIMATELY ½ BACKFILLED, WATER THOROUGHLY BEFORE PLACING REMAINDER OF BACKFILL. REPEAT WATERING UNTIL NO MORE IS ABSORBED. WATER AGAIN AFTER PLACING AND TAMPING FINAL LAYER OF BACKFILL.
B. SET CONTAINER-GROWN STOCK PLUMB AND IN CENTER OF PIT OR TRENCH WITH TOP OF BALL RAISED ABOVE ADJACENT FINISH GRADES AS INDICATED.
1. CAREFULLY REMOVE CONTAINERS SO AS NOT TO DAMAGE ROOT BALLS.
2. PLACE BACKFILL AROUND BALL IN LAYERS, TAMPING TO SETTLE BACKFILL AND ELIMINATE VOIDS AND AIR POCKETS. WHEN PIT IS APPROXIMATELY ½ BACKFILLED, WATER THOROUGHLY BEFORE PLACING REMAINDER OF BACKFILL. REPEAT WATERING UNTIL NO MORE IS ABSORBED. WATER AGAIN AFTER PLACING AND TAMPING FINAL LAYER OF BACKFILL. DO NOT COVER TOP OF ROOT BALL WITH BACKFILL.

3.05 TREE AND SHRUB GUY STAKING:
A. UPRIGHT STAKING AND TYING: STAKE TREES OF LESS THAN 2 INCH (50 MM) CALIPER ONLY AS REQUIRED TO PREVENT WIND TIP-OUT. USE A MINIMUM OF 2 STAKES OF LENGTH REQUIRED TO PENETRATE AT LEAST 18 INCHES (450 MM) BELOW BOTTOM OF BACKFILLED EXCAVATION AND TO EXTEND AT LEAST 73 INCHES (1800 MM) ABOVE GRADE. SET VERTICAL STAKES AND SPACE TO AVOID PENETRATING BALLS OR ROOT MASSES. SUPPORT TREES WITH 2 STRIPS OF WEB STRAPS AT TREE TRUNK.
B. GUYING AND STAKING: GUY AND STAKE TREES EXCEEDING 14 FEET (4.2 M) AND MORE THAN 3 INCH (75 MM) CALIPER ONLY TO PREVENT TIPPING UNLESS OTHERWISE INDICATED. SECURELY ATTACH NO FEWER THAN 3 GUYS TO STAKES 30 INCHES (760 MM) LONG, DRIVEN TO GRADE. ATTACH FLAGS TO EACH GUY WIRE, 30 INCHES (760 MM) ABOVE FINISH GRADE.

3.06 PLANTING GROUNDCOVER AND HERBACEOUS PLANT MATERIAL:
A. SPACE GROUNDCOVER AND PLANTS AS INDICATED.
B. DIG HOLES LARGE ENOUGH TO ALLOW SPREADING OF ROOTS, AND BACKFILL WITH PLANTING SOIL. WORK SOIL AROUND ROOTS TO ELIMINATE AIR POCKETS. DO NOT COVER PLANT CROWNS WITH SOIL. WATER THOROUGHLY AFTER PLANTING.

3.07 FILL:
A. PREPARATION: REMOVE VEGETATION, TOPSOIL, DEBRIS, WET AND UNSATISFACTORY SOIL MATERIALS, OBSTRUCTIONS, AND DELETERIOUS MATERIALS FROM GROUND SURFACE PRIOR TO PLACING FILLS.
B. WHEN SUBGRADE OR EXISTING GROUND SURFACE TO RECEIVE FILL HAS A DENSITY LESS THAN THAT REQUIRED FOR FILL, BREAK UP GROUND SURFACE TO DEPTH REQUIRED, PULVERIZE, MOISTURE-CONDITION OR AERATE SOIL AND RECOMPACT TO REQUIRED DENSITY.
C. PLACE BACKFILL AND FILL MATERIALS EVENLY ON ALL SIDES OF STRUCTURES TO REQUIRED ELEVATIONS. PLACE BACKFILL AND FILL UNIFORMLY ALONG THE FULL LENGTH OF EACH STRUCTURE.

3.08 GRADING:
A. GENERAL: UNIFORMLY GRADE AREAS TO A SMOOTH SURFACE, FREE FROM IRREGULAR SURFACE CHANGES. COMPLY WITH COMPACT REQUIREMENTS AND GRADE TO CROSS SECTIONS, LINES, AND ELEVATIONS INDICATED.
1. PROVIDE A SMOOTH TRANSITION BETWEEN EXISTING ADJACENT GRADES AND NEW GRADES.
2. CUT OUT SOFT SPOTS, FILL LOW SPOTS, AND TRIM HIGH SPOTS TO CONFORM TO REQUIRED SURFACE TOLERANCES.
B. SITE GRADING: SLOPE GRADES TO PREVENT PONDING. FINISH SUBGRADES TO REQUIRED ELEVATIONS WITHIN ½".

3.09 FINAL GRADING AND PLACEMENT OF TOPSOIL:
A. LOOSEN SUBGRADE AND LAWN AREA TO A MINIMUM DEPTH OF 4 INCHES. REMOVE STONES MEASURING OVER 1-1.2 INCHES IN ANY DIMENSION. REMOVE STICKS, ROOTS, RUBBISH, AND OTHER EXTRANEOUS MATTER. LIMIT PREPARATION TO AREAS WHICH WILL BE PLANTED PROMPTLY AFTER PREPARATION.
1. SPREAD TOPSOIL TO MINIMUM DEPTH REQUIRED TO MEET LINES, GRADES, AND ELEVATIONS SHOWN, AFTER LIGHT ROLLING AND NATURAL SETTLEMENT. MINIMUM DEPTH OF TOPSOIL SHALL BE 4 INCHES UNLESS OTHERWISE INDICATED. IN TREE AND SHRUB PLANTING AREAS THERE SHALL BE 18"-24" TOPSOIL. IN ISLANDS, DEPTH OF TOPSOIL SHALL BE 36". AROUND THE PLANT, AT LEAST IN AN AREA EQUAL TO THE PLANTS' MATURE CANOPY SIZE.
2. PLACE APPROXIMATELY ½ OF TOTAL AMOUNT OF TOPSOIL REQUIRED. WORK INTO TOP OF LOOSENED SUBGRADE TO CREATE A TRANSITION LAYER AND THEN PLACE REMAINDER OF TOPSOIL.

3.10 RECONDITIONING LAWN AND SEEDING OF BERMS:
A. RECONDITION EXISTING LAWN AREAS OR OTHER CONTRACTOR'S WORK DAMAGED BY OPERATIONS, INCLUDING STORAGE OF MATERIALS OR EQUIPMENT AND MOVEMENT OF VEHICLES.
B. REMOVE SOD AND VEGETATION FROM DAMAGED LAWN AREAS; DO NOT BURY INTO SOIL. REMOVE TOPSOIL CONTAINING FOREIGN MATERIALS RESULTING FROM CONTRACTOR'S OPERATIONS, INCLUDING OIL DRIPPINGS, FUEL SPILLS, STONE, GRAVEL, AND OTHER CONSTRUCTION MATERIALS, AND REPLACE WITH NEW TOPSOIL.
C. WHERE SUBSTANTIAL LAWN REMAINS, MOW, DETHATCH, CORE AERATE, AND RAKE. REMOVE WEEDS BEFORE SEEDING. WHERE WEEDS ARE EXTENSIVE, APPLY SELECTIVE HERBICIDES AS REQUIRED. DO NOT USE PRE-EMERGENCE HERBICIDES.
D. REMOVE WASTE AND FOREIGN MATERIALS, INCLUDING WEEDS, SOIL CORES, GRASS, VEGETATION, AND TURF, AND LEGALLY DISPOSE OF IT OFF THE OWNER'S PROPERTY.
E. TILL STRIPPED, BARE, AND COMPACTED AREAS THOROUGHLY TO A DEPTH OF 6 INCHES (150 MM).
F. APPLY INITIAL FERTILIZERS AND MIX THOROUGHLY INTO TOP 4 INCHES (1000 MM) OF SOIL. FERTILIZER SHALL PROVIDE 1 LB. PER 1,000 SQ. FT. OF ACTUAL NITROGEN, 4 PERCENT (4%) PHOSPHOROUS, AND 2 PERCENT (2%) POTASSIUM BY WEIGHT. PROVIDE NEW PLANTING SOIL AS REQUIRED T FILL LOW SPOTS AND MEET NEW FINISH GRADES.
G. APPLY SOD, OR SEED AND MULCH AS STATED IN SECTION 621.05 AND 621.06 OF THE 1999 INDIANA DEPARTMENT OF TRANSPORTATION STANDARD SPECIFICATION.
H. WATER NEWLY PLANTED AREAS AND KEEP MOIST UNTIL NEW GRASS IS ESTABLISHED.

3.11 MULCHING:
A. MULCH BACKFILLED SURFACES OF PITS, TRENCHES, PLANTED AREAS, AND OTHER AREAS INDICATED WITH A 3" (75 MM) THICK LAYER OF ORGANIC MULCH AND FINISH LEVEL WITH ADJACENT FINISH GRADES. DO NOT PLACE MULCH AGAINST TRUNKS OR STEMS.

3.12 CLEANUP
A. DURING LANDSCAPING, KEEP PAVEMENTS CLEAN, SIDEWALKS AND PUBLIC RIGHT OF WAY CLEAR AND WORK AREA IN AN ORDERLY CONDITION.

3.13 DISPOSAL OF SURPLUS AND WASTE MATERIALS:
A. DISPOSAL: REMOVE SURPLUS SOIL AND WASTE MATERIAL, INCLUDING EXCESS SUBSOIL, UNSUITABLE SOIL, TRASH AND DEBRIS, AND LEGALLY DISPOSE OF IT OFF THE OWNER'S PROPERTY.

PART 4- WARRANTY AND MAINTENANCE

4.01 WARRANTY
A. REMOVE AND REPLACE DEAD PLANTING MATERIALS IMMEDIATELY UNLESS REQUIRED TO PLANT IN THE SUCCEEDING PLANTING SEASON. REPLACE PLANTING MATERIALS THAT ARE MORE THAN 25 PERCENT (25%) DEAD OR IN AN UNHEALTHY CONDITION AT END OF WARRANTY PERIOD.

4.02 TREE AND SHRUB MAINTENANCE
A. PROPERTY OWNERS HAVE THE FOLLOWING RESPONSIBILITIES FOR SHRUBS OR TREES PLANTED IN OR NEAR THE PUBLIC PARKWAY:
1. NO PROPERTY OWNER SHALL PERMIT LIMBS OR BRANCHES OBSTRUCTING MOVEMENT OR VISION OF VEHICLES OR PEDESTRIANS ALONG STREETS, ALLEYS OR SIDEWALKS IN THE CITY. EXCEPT FOR WORK NECESSITATED BY STORMS OR OTHER EMERGENCIES, A PERMIT SHALL BE OBTAINED BEFORE ANY PERSON MAY REMOVE OR CUT ANY TREES UPON THE PUBLIC PARKWAY WITHIN THE CITY. A PERMIT SHALL BE ISSUED OR DENIED WITHOUT CHARGE BY THE GREENSPACE ADMINISTRATOR WITHIN EIGHT DAYS OF THE APPLICATION.
2. SHOULD THE CONDITION OF ANY PLANT MATERIAL NOT BE REVERSIBLE, THE OWNER SHALL REPLACE THE TREE OR PLANT MATERIALS WITH ACCEPTABLE TREES (FROM THE ACCEPTED SHADE TREE LIST) OR PLANTS AS APPLICABLE, OR EQUIVALENT TREES AS SPECIFIED BY THE GREENSPACE ADMINISTRATOR.
3. OFF-STREET PARKING AREAS REQUIRE A SCREENING AREA BETWEEN THE RIGHT-OF-WAY AND THE PARKING AREA PLANTED WITH SHRUBS. THE SHRUBS SHALL BE ALLOWED TO GROW SO THAT THEY FORM A CONTINUOUS TIGHT SCREEN AT MATURE GROWTH AT 30-48" IN HEIGHT. WITHIN THE TWENTY-FIVE FOOT VISION TRIANGLE AT ENTRANCES TO AND EXITS FROM PARKING LOTS, VISION SHALL BE CLEAR BETWEEN TWO AND ONE-HALF FEET AND EIGHT FEET IN HEIGHT. FOR THIS PURPOSE, THE SCREEN HEIGHT MAY BE REDUCED TO BETWEEN 18-30".
4. ANY TREES REQUIRED BY THE LANDSCAPE PLAN SHALL BE MAINTAINED IN GOOD CONDITION SO AS TO PRESENT A HEALTHY, NEAT AND ORDERLY APPEARANCE, MAINTAINING THE TREE'S NATURAL SHAPE AND CROWN-EXCESSIVE PRUNING OR TOPPING ARE NOT ACCEPTABLE OR APPROVED PRACTICES. TREE TOPPING SHALL BE UNLAWFUL AS A NORMAL PRACTICE BY A PERSON, FIRM OR CITY DEPARTMENT TO ANY STREET TREE, PARK TREE, OTHER TREE ON PUBLIC PROPERTY OR TREES REQUIRED BY THE LANDSCAPE PLAN.
5. ALL PLANT MATERIALS SHALL BE KEPT FREE FROM REFUSE AND DEBRIS.

APPROVED BY THE WEST LAFAYETTE BOARD OF PUBLIC WORKS AND SAFETY ON JULY 5, 2005.

City of West Lafayette
City Hall, 609 West Navajo
West Lafayette, IN 47906

Date	July 2005	Sheet	12 of 12	
Holey Moley	**(800) 382-5544**			
City Engineer	**(765) 775-5130**			
Public Works Department	**(765) 775-5145**			
Development Department	**(765) 775-5160**			
Fire Department	**(765) 775-5175**			
Police Department	**(765) 775-5200**			
Project Name		Project Sheet Number of		

Landscaping Specifications